101, Rev. A
70-m Subnet
Telecommunications Interfaces

Errata

Effective: March 31, 2004

The S-band amplifier types shown in Figure 1 and the graphic included for Figure 5 on page 29 in the August 22, 2003 release are incorrect. Please replace pages 1, 2, 25, 26, 29, and 30 with the attached material. Pages 25 and 30 have not been changed but are included to enable double-sided printing.

This page intentionally left blank

101, Rev. A
70-m Subnet
Telecommunications Interfaces

Change 1, Released March 31, 2004

Document Owner:

Signature on file at DSMS Library

S. D. Slobin Date
Antenna System Engineer

Approved by:

Signature on file at DSMS Library

A. J. Freiley Date
Antenna Product Domain
System Development Engineer

Released by:

Signature on file at DSMS Library
3/31/04

IPN Document Release Date

Change Log

Rev	Issue Date	Paragraphs Affected	Change Summary
Initial	1/15/2001	All	
A	07/30/2003	All	Revised gain and noise temperature reference point to feedhorn aperture. Documented installation of new feedcone at DSS 63. Provided diagrams of L-band microwave equipment and Low-noise S-band cone at DSS 43.
Chg 1	03/31/2004	Figures 1, 5	Corrected S-band amplifier types in Figure 1. Replaced Figure 5 with correct graphic

Note to Readers

There are two sets of document histories in the 810-005 document that are reflected in the header at the top of the page. First, the entire document is periodically released as a revision when major changes affect a majority of the modules. For example, this module is part of 810-005, Revision E. Second, the individual modules also change, starting as an initial issue that has no revision letter. When a module is changed, a change letter is appended to the module number on the second line of the header and a summary of the changes is entered in the module's change log.

Table 10. DSS 63 Western Horizon S-Band T_{op} (K) with SPD Cone

ELEV, deg	AZIMUTH, deg																				
	210	211	212	213	214	215	216	217	218	219	220	221	222	223	224	225	226	227	228	229	230
40.0	26.2	20.4	19.6	19.7	19.4	19.6	20.2	20.5	21.6	26.6	22.3	20.2	19.6	19.5	19.1	19.1	19.2	19.2	19.3	19.2	19.1
35.0	19.5	19.5	19.9	19.8	20.0	20.2	20.4	20.7	22.0	25.8	21.6	20.6	20.3	20.1	19.9	19.8	19.7	19.7	19.6	19.7	19.7
30.0	20.4	20.6	20.7	20.9	21.0	21.8	24.2	22.9	21.9	21.5	21.0	20.8	20.8	20.7	20.6	20.5	20.5	20.5	20.4	20.4	20.2
25.0	21.2	21.3	21.2	21.5	21.7	23.0	26.6	24.4	22.6	22.1	21.8	21.5	21.3	21.4	21.2	21.1	21.1	21.1	21.1	21.1	20.9
20.0	22.9	23.4	23.7	24.0	25.5	26.4	24.6	23.8	23.5	23.1	23.0	22.7	22.8	22.7	22.6	22.4	22.4	22.4	22.6	22.7	22.5
19.0	23.5	23.6	23.8	24.3	25.7	27.4	25.5	24.6	24.0	23.6	23.3	23.2	23.4	23.0	23.2	23.0	23.0	22.9	22.9	23.0	22.9
18.0	24.3	25.0	28.2	30.5	26.1	25.3	24.5	24.2	23.8	23.7	23.6	23.6	23.5	23.6	23.4	23.4	23.4	23.4	23.4	23.4	23.5
17.0	24.8	25.0	27.3	27.3	26.8	25.7	24.9	24.7	24.5	24.2	24.2	24.1	24.0	24.0	24.0	24.0	24.0	24.0	23.9	24.0	23.9
16.0	25.8	27.2	28.0	26.6	25.7	25.4	24.9	24.7	24.6	24.6	24.5	24.8	24.8	24.8	24.6	24.7	24.6	24.6	24.7	24.7	24.5
15.0	27.1	27.8	29.8	27.6	27.3	26.4	25.7	25.5	25.6	25.4	25.3	25.6	25.3	25.3	25.3	26.0	27.6	25.5	25.1	25.2	25.0
14.0	29.5	35.3	28.7	26.9	26.6	26.3	26.3	26.0	26.2	26.0	26.1	26.1	26.0	26.1	26.2	26.0	26.0	26.0	26.1	26.0	26.1
13.0	35.0	42.1	30.3	28.1	27.5	27.4	27.0	26.8	27.0	26.8	26.8	26.9	26.7	26.8	26.9	27.0	26.9	26.8	26.9	26.8	26.8
12.0	30.7	29.6	28.6	28.2	27.9	27.9	27.7	27.5	27.7	27.5	27.5	27.5	27.5	27.5	27.5	27.6	27.7	27.8	27.7	27.8	27.8
11.0	31.3	30.8	29.8	29.2	28.9	28.7	28.4	28.4	28.6	28.5	28.5	28.6	28.5	28.5	28.5	28.4	28.4	28.7	28.6	28.6	28.6
10.0	29.8	29.9	29.8	29.6	29.5	29.4	29.3	29.4	29.3	29.4	29.5	29.4	29.3	29.7	29.5	29.5	29.4	29.5	29.5	29.7	29.7
9.5	30.6	30.4	30.2	30.3	30.1	30.1	30.1	30.1	30.2	30.1	30.3	30.3	30.0	30.0	30.6	30.3	30.1	30.3	30.4	30.2	30.2
9.0	30.9	30.9	30.8	30.7	30.9	30.6	30.8	30.7	30.8	30.7	31.1	30.8	30.7	30.7	30.9	30.8	30.9	30.7	31.1	30.8	31.0
8.5	31.5	31.5	31.4	31.6	31.7	31.5	31.4	31.5	31.4	31.4	31.3	31.3	31.2	31.2	31.3	31.3	31.2	31.4	31.3	31.3	31.3
8.0	32.3	32.1	31.9	32.3	32.1	32.1	32.2	31.9	32.4	32.2	32.3	32.2	32.4	32.3	32.0	32.2	32.4	32.4	32.4	32.5	32.5
7.5	33.1	33.2	32.9	33.5	33.0	33.0	33.3	33.0	32.9	33.4	33.2	33.3	33.2	33.1	33.4	33.5	33.2	33.3	33.2	33.2	33.5
7.0	33.9	34.5	33.8	34.3	34.3	34.1	34.0	34.0	34.3	34.3	34.6	34.3	34.3	34.5	34.7	34.8	34.6	34.7	34.7	34.5	34.5
6.5	34.4	34.2	34.7	34.8	34.7	34.8	34.4	34.5	34.4	34.8	34.5	34.9	34.8	34.7	35.0	35.2	35.2	35.3	35.2	35.2	35.4
6.0	35.4	35.3	35.7	36.2	35.5	35.9	35.8	35.8	36.1	36.6	36.7	36.3	36.8	36.9	36.9	37.0	37.1	36.9	37.2	37.3	37.1
	AZIMUTH, deg																				
	230	231	232	233	234	235	236	237	238	239	240	241	242	243	244	245	246	247	248	249	250
40.0	19.1	19.0	18.9	18.9	18.9	18.8	18.8	18.8	18.9	18.8	18.8	18.9	18.9	18.9	18.9	18.9	18.9	18.9	18.9	18.9	19.0
35.0	19.7	19.5	19.6	19.4	19.3	19.5	19.4	19.3	19.5	19.4	19.2	19.2	19.4	19.4	19.2	19.1	19.2	19.3	19.4	19.2	19.2
30.0	20.2	20.3	20.2	20.2	20.3	20.2	20.2	20.1	20.1	20.0	20.1	20.0	19.9	20.0	20.0	20.1	20.1	20.0	20.2	20.2	20.2
25.0	20.9	20.9	21.2	21.1	20.8	20.9	20.9	20.9	20.9	20.9	21.0	21.0	21.0	21.0	21.1	21.1	21.1	21.1	21.1	21.1	21.0
20.0	22.5	22.6	22.7	22.5	22.6	22.6	22.5	22.9	22.7	22.7	22.6	22.5	22.5	22.5	22.6	22.6	22.6	22.6	22.6	22.7	22.8
19.0	22.9	23.0	23.0	23.0	23.0	23.0	23.0	23.0	23.0	23.2	23.1	23.2	23.2	23.1	23.1	23.1	23.1	23.1	23.2	23.2	23.2
18.0	23.5	23.5	23.5	23.5	23.6	23.6	23.7	23.7	23.7	23.8	23.8	23.9	23.8	23.7	23.7	23.7	23.7	23.7	23.8	23.8	23.8
17.0	23.9	23.9	24.1	24.1	24.1	24.1	24.1	24.1	24.3	24.3	24.3	24.3	24.2	24.2	24.2	24.2	24.2	24.2	24.2	24.3	24.3
16.0	24.5	24.6	24.7	24.7	24.7	24.8	24.8	24.8	24.8	24.9	24.7	24.7	24.6	24.6	24.7	24.8	24.9	24.8	24.9	24.9	24.9
15.0	25.0	25.2	25.2	25.2	25.1	25.3	25.2	25.3	25.3	25.3	25.6	25.4	25.5	25.5	25.5	25.6	25.6	25.6	25.5	25.7	25.6
14.0	26.1	26.0	26.1	26.1	26.2	26.2	26.2	26.3	26.2	26.3	26.4	26.3	26.3	26.3	26.4	26.4	26.4	26.5	26.6	26.5	26.6
13.0	26.8	26.9	26.8	26.8	26.8	26.9	26.9	26.9	26.9	27.0	27.0	27.0	27.1	27.1	27.1	27.1	27.1	27.1	27.2	27.2	27.3
12.0	27.8	27.6	27.7	27.7	27.8	27.8	27.8	27.8	27.9	28.0	27.9	27.9	27.9	27.9	28.0	28.0	28.0	28.1	28.1	28.2	28.2
11.0	28.6	28.6	28.5	28.5	28.6	28.5	28.6	28.8	28.7	28.7	28.9	28.8	28.8	28.8	28.8	28.9	28.9	28.9	28.9	29.0	29.0
10.0	29.7	29.5	29.5	29.5	29.6	29.6	29.6	29.7	29.8	29.9	29.8	29.8	29.9	29.9	30.0	30.0	30.0	30.0	30.1	30.1	30.1
9.5	30.2	30.4	30.3	30.3	30.3	30.3	30.2	30.5	30.4	30.4	30.6	30.5	30.6	30.6	30.6	30.7	30.8	30.7	30.6	30.7	30.7
9.0	31.0	30.8	31.0	30.9	31.1	31.0	31.0	31.1	31.1	31.3	31.2	31.3	31.4	31.3	31.4	31.4	31.4	31.4	31.4	31.5	31.6
8.5	31.3	31.3	31.5	31.5	31.4	31.5	31.6	31.7	31.6	31.8	31.8	32.0	31.8	31.9	32.1	32.0	32.2	32.2	32.3	32.3	32.4
8.0	32.5	32.4	32.5	32.4	32.3	32.5	32.7	32.7	32.8	32.9	32.8	32.9	32.9	33.0	32.9	33.0	33.1	33.2	33.3	33.3	33.5
7.5	33.5	33.3	33.1	33.3	33.4	33.5	33.6	33.6	33.8	33.9	34.0	33.9	34.1	34.3	34.2	34.7	34.5	34.6	34.5	34.6	34.7
7.0	34.5	34.6	34.5	34.5	34.5	34.7	34.5	34.6	34.7	34.9	35.1	35.4	35.4	35.5	35.6	35.8	36.1	36.3	36.5	36.4	36.5
6.5	35.4	35.4	35.4	35.7	36.0	35.9	36.0	35.8	35.3	35.7	35.8	36.2	36.5	36.8	37.2	37.9	39.0	42.3	45.9	44.5	39.2
6.0	37.1	37.2	37.1	37.0	37.3	37.3	37.2	37.5	37.5	37.9	38.4	39.2	41.6	47.5	49.4	57.4	89.6	113	122	118	105

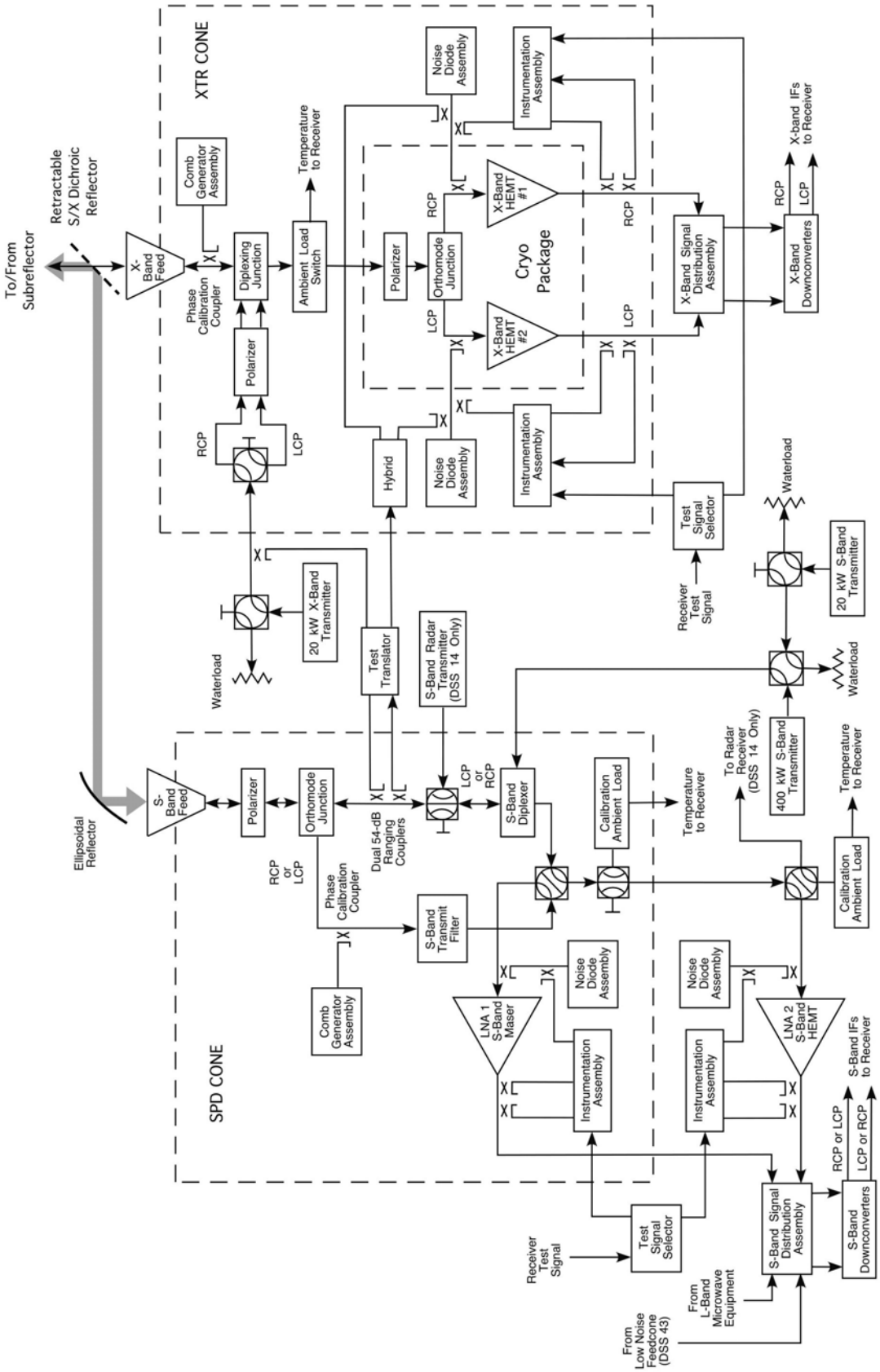

Figure 1. Functional Block Diagram of S-Band and X-Band Microwave and Transmitter Equipment

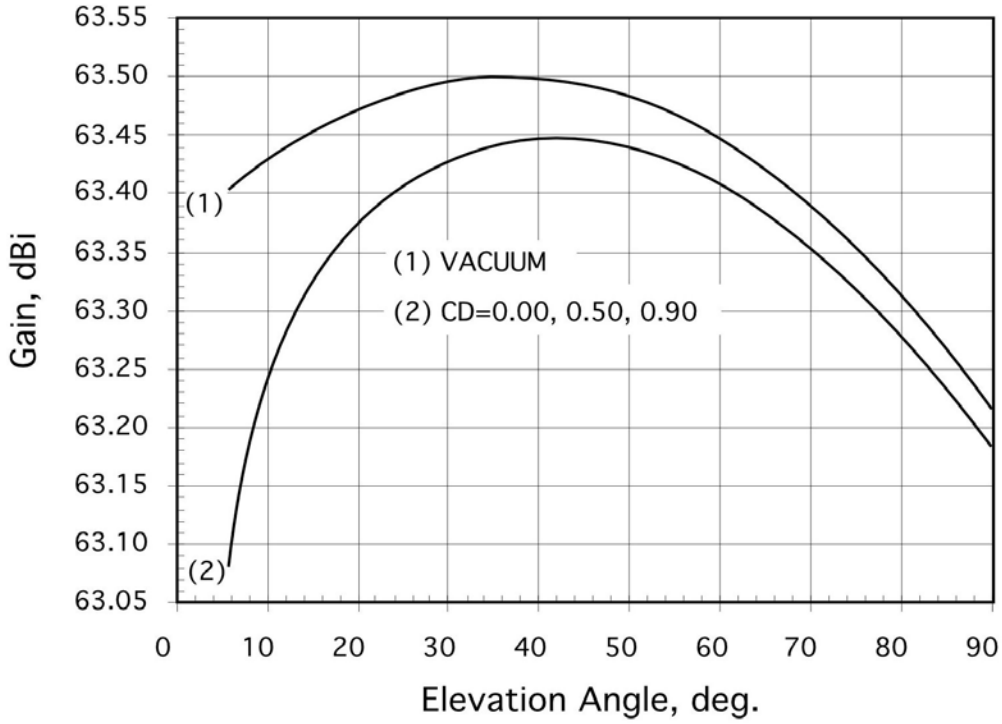

Figure 4. S-Band Receive Gain, All Stations, at Feedhorn Aperture

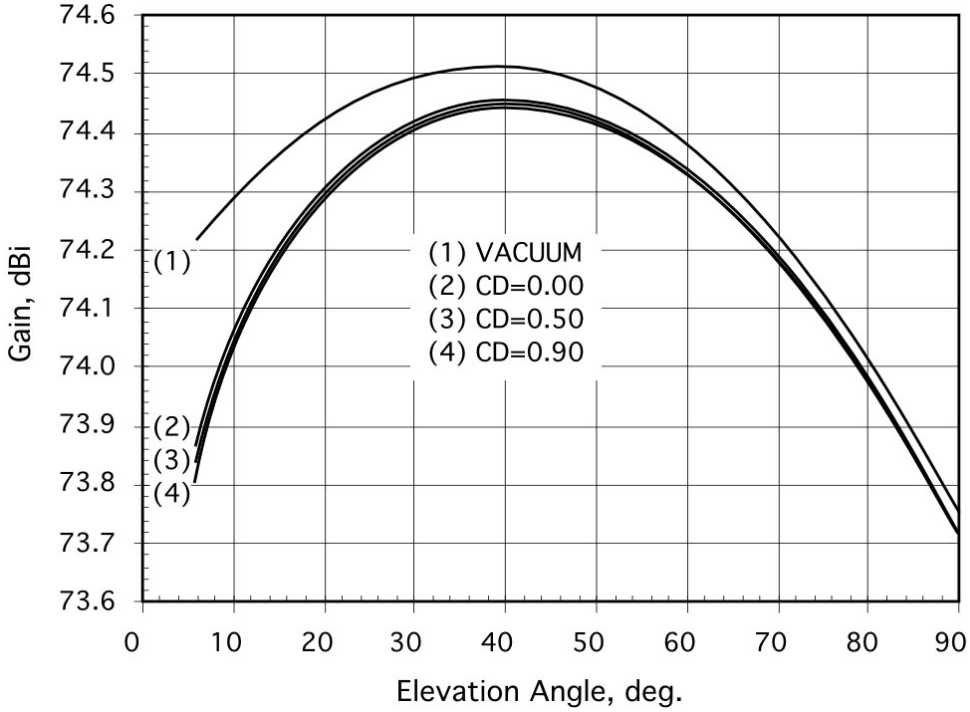

Figure 5. X-Band Receive Gain, DSS 14 Antenna, X-Only Configuration (S/X Dichroic Retracted), at Feedhorn Aperture

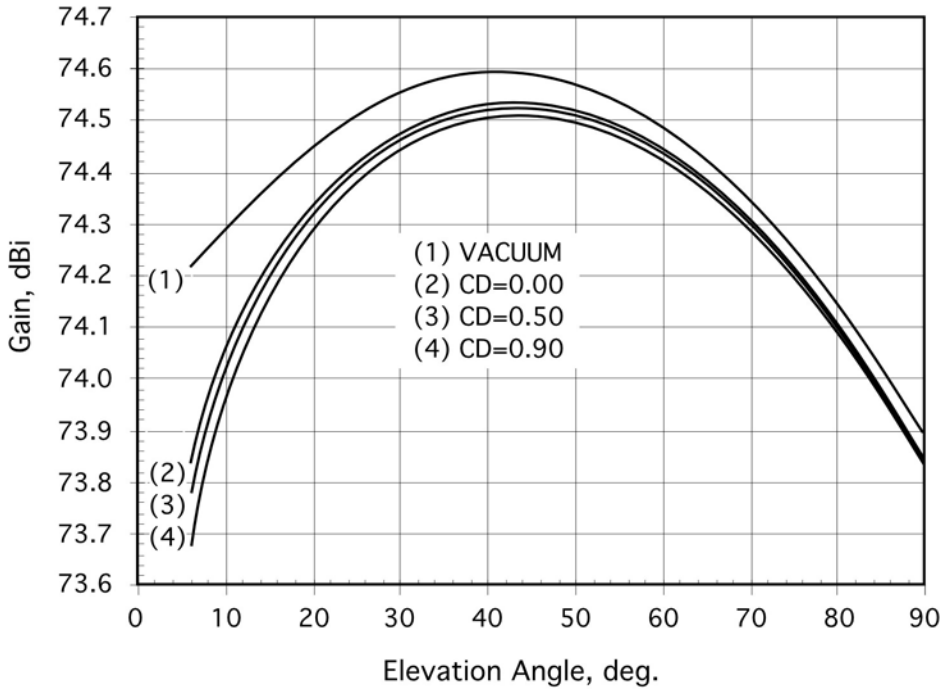

Figure 6. X-Band Receive Gain, DSS 43 Antenna, X-Only Configuration (S/X Dichroic Retracted), at Feedhorn Aperture

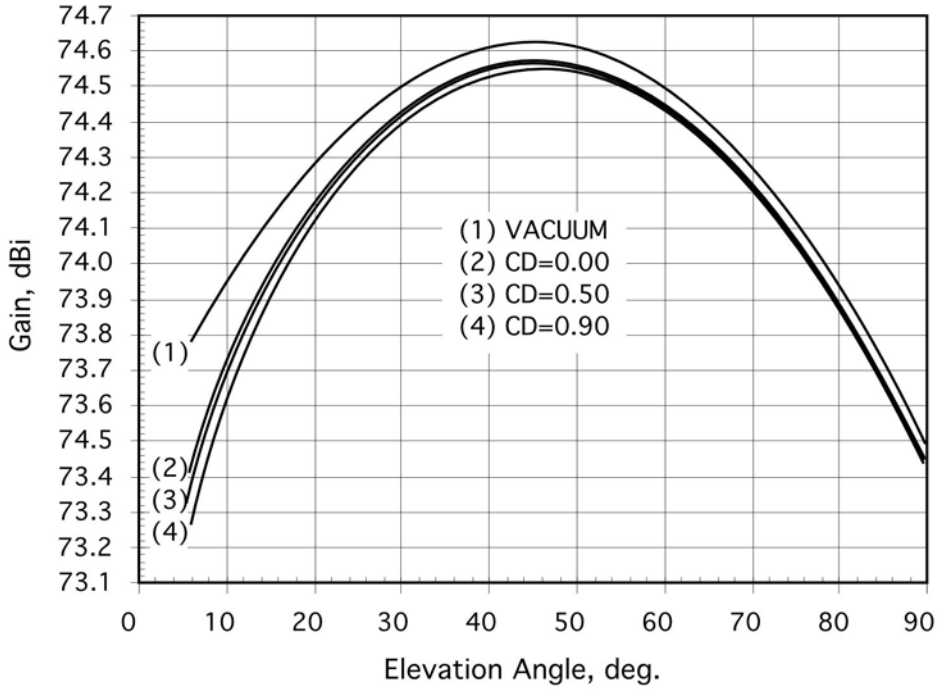

Figure 7. X-Band Receive Gain, DSS 63 Antenna, X-Only Configuration (S/X Dichroic Retracted), at Feedhorn Aperture