RELEASE NOTICE

TO: DSN Document 810-5 Distribution January 15, 1997

FROM: R. W. Sniffin, Editor

SUBJECT: Update of DSN Document 810-5

Please make the changes listed below in your copy of DSN Document 810-5, Volume I. In addition to this mail distribution, the revised modules are available in pdf form (requires Adobe Acrobat™) from our web server, **http://deepspace1.jpl.nasa.gov/810-5/** .

I would like to encourage you to take advantage of the electronic distribution of this document. I will notify those on our distribution list who have supplied me with an e-mail address and indicated they are willing to print out the pdfs at their location at the time I send the revision to be printed. This is at least two weeks before it is ready to be distributed by mail. If you think that such an approach would be beneficial to you, please notify me and I will modify our distribution list. My e-mail address is **Robert.W.Sniffin@jpl.nasa.gov** .

Module ID	New Status	Procedural Instructions	Remarks
Cover and Foreword	Dec. 1, 1996	Remove existing Cover and Foreword replace with revised Cover and Foreword	Revised Foreword was accidentally omitted from last revision package. Cover is being revised to include our URL.
TCI-10	Rev. G,	Remove existing module and replace with Revision G	Provides System Noise Temperature at DSS 43 using S-band ultracone, S-band rise and set horizon mask T(op)s for all antennas, and functional block diagrams for SPD and XRO cones.
TRK-30	Rev. E, Change 1	Remove existing pages and replace with changed pages	Corrects information about Transmit & Receiver Time (2.2.1) and Inversion (2.2.7.3)
CMD-10	Rev. C	Remove existing module and replace with Revision C	Upgrades information on DSN Command System to what is presently provided in module CMD-10(PC) in Volume II of this handbook with minor revisions resulting from the Command Subsystem and 34-meter BWG antenna implementations.
CMD-20	Deleted	Remove and discard existing tab and module	Command capabilities for all antennas are now included in module CMD-10.

810-5; Rev. D, Volume I

Deep Space Network/Flight Project Interface Design Handbook

http://deepspace1.jpl.nasa.gov/810-5/

Approved by:

P.T. Westmoreland
TDA Engineering Manager

National Aeronautics and
Space Administration

Jet Propulsion Laboratory
California Institute of Technology
Pasadena, California

Foreword

This modular handbook is provided for use by all NASA-approved flight projects. It is a standard source of technical design information for Deep Space Network (DSN) interfaces with flight projects in the areas of telecommunications, data processing, and simulation.

The information will permit flight projects to make an early start in designing hardware and software, with assurance that the resulting project interfaces will be compatible with the DSN configuration when required for mission support. Specific DSN commitments to support individual flight projects are negotiated and documented separately in the appropriate Mission Requirements Request (MRR) and supporting documents.

For matters of interpretation or questions concerning this handbook, contact the DSN Data Services Office, Organization 940, Jet Propulsion Laboratory, 4800 Oak Grove Drive, Pasadena, California, 91109.

Table of Contents as of January 15, 1997

(Replaces Table of Contents as of December,1 1996)

Designator	Release	Modular Document Title
INT-10	Rev. C, 1 Dec. 96	Handbook Introduction
TCI-10	Rev. G, 15 Jan. 97	DSN Telecommunications Interfaces, 70-meter Antenna Subnet
TCI-20	Rev. D, 15 Feb. 95	DSN Telecommunications Interfaces, 26-meter Antenna Subnet
TCI-30	Rev. D, 1 May 92 Chg. 1	DSN Telecommunications Interfaces, 34-meter Antenna Subnets
TCI-31	1 May 96	DSN Telecommunications Interfaces, 34-meter BWG Antennas
TCI-40	Rev. C, 1 May 92	DSN Telecommunications Interfaces, Atmospheric and Environmental Effects
TCI-50	15 May 79	DSN Telecommunications Interfaces, Solar Corona and Solar Wind Effects
GEO-10	Rev. D, 1 April 89 Chg. 1	DSN Geometry and Spacecraft Visibility
TRK-10	Rev. D, 15 March 88	DSN Tracking System, Angle Tracking
TRK-20	Rev. D, 15 March 90 Chg. 1	DSN Tracking System, Doppler and Signal Level
TRK-30	Rev. E, 17 Jan. 97 Chg. 1	DSN Tracking System, Ranging
TRK-40	15 March 90	DSN Tracking System, 26-m Doppler and Ranging
TLM-10	Rev. C, 1 August 92	DSN Telemetry System, General Information
TLM-20	15 July 88 Chg. 2	DSN Telemetry System, Signal Reception, Translation
TLM-21	1 December 1996	DSN Telemetry System, Block V Receiver
TLM-30	Rev. A, 1 March 90	DSN Telemetry System, Data Detection and Recovery
TLM-40	15 July 91 Chg. 1	DSN Telemetry System, Data Decoding
TLM-50	15 March 88	DSN Telemetry System, 26-m Antenna Subnet
CMD-10	Rev. C, 15 Jan. 97	DSN Command System

Table of Contents as of January 15, 1997 (Continued)

Designator	Release	Modular Document Title
RSS-10	15 February 95	DSN Radio Science System
TSS-10	Rev. A, 1 April 89 Chg. 1	DSN Test Support System
VLBI-10	1 June 89	DSN VLBI System, Narrow Channel Bandwidth
VLBI-20	15 June 90	DSN VLBI System, Wide Channel Bandwidth
FTS-10	Rev. A, 15 July 91 Chg. 3	Frequency and Timing
MED-10	15 Nov. 92	Media Calibration
GCI-10	Rev. A, 1 Nov. 84	Ground Communications Facility Interfaces
NCI-10	15 Feb. 75	Control Center Interfaces
APPENDIX A	Chg. 2, 1 May 86	Glossary of Abbreviations

DSN/Flight Project
Interface Design

TCI-10, Rev. G
DSN Telecommunications Interfaces
70 Meter Antenna Subnet

January 15, 1997

Prepared by:

S. D. Slobin
System Cognizant Development Engineer

Approved by:

A. J. Freiley
RF System Engineer

Released by:

G. E. Shultz
DSN Document Release

Contents

Paragraph **Page**

1. Introduction 4
   1.1 Purpose 4
   1.2 Scope 4

2. General Information 4
   2.1 70-m Diameter Antennas (DSS 14, 43, and 63) 4
   2.2 Telecommunications Parameters 4
   2.3 Arraying 6

Appendixes

Appendix **Page**

A Equations for Curves in Figures 1–2 and 5–11 27

Tables

Table **Page**

1 S-band Transmit Characteristics 7
2 L-, S-, and X-band Receive Characteristics 9
3 DSS 14 Eastern Horizon S-band T_{OP} with SPD Cone 13
4 DSS 14 Western Horizon S-band T_{OP} with SPD Cone 14
5 DSS 43 Eastern Horizon S-band T_{OP} with Ultracone 15
6 DSS 43 Western Horizon S-band T_{OP} with Ultracone 16
7 DSS 63 Eastern Horizon S-band T_{OP} with SPD Cone 17
8 DSS 63 Western Horizon S-band T_{OP} with SPD Cone 18
9 Gain Reduction Due to Wind Loading, 70-m Antenna 19
10 Recommended Minimum Operating Carrier Signal Levels 19

Illustrations

Figure **Page**

1 L-band System Noise Temperature, All Stations 20
2 S-band System Noise Temperature, DSS 14, LNA-1, Nondiplexed..... 20
3 Eastern Horizon S-band System Noise Temperature at 6° Elevation Angle 21
4 Western Horizon S-band System Noise Temperature at 6° Elevation Angle..... 21
5 X-band System Noise Temperature vs. Elevation Angle, DSS 14..... 22
6 X-band System Noise Temperature vs. Elevation Angle, DSS 43 and 63..... 22
7 S-band Gain vs. Elevation Angle, All Stations 23
8 X-band Gain vs. Elevation Angle, DSS 14 23
9 X-band Gain vs. Elevation Angle, DSS 43 24
10 X-band Gain vs. Elevation Angle, DSS 63 24
11 Antenna Pointing Loss vs. Pointing Error..... 25
12 Functional Block Diagram of Microwave and Transmitter Subsystems 26

1. Introduction

1.1 Purpose

This module provides sufficient information concerning the performance of the DSN 70-m antennas to enable a flight project to design a telecommunications link.

1.2 Scope

The discussion in this module is limited to those parameters which characterize the RF performance of the 70-m antennas, including the effects of five specific weather conditions on 70-m receiving system gain and noise temperature.

2. General Information

2.1 70-m Diameter Antennas (DSS 14, 43, and 63)

Three 70-m antennas form one subnet of the Deep Space Network (DSN). One antenna, Deep Space Station (DSS) 14, is located at Goldstone, California; another (DSS 43) is located near Canberra, Australia; and a third antenna (DSS 63) is located near Madrid, Spain. The precise station locations are shown in module GEO-10, *Coverage and Geometry*.

2.2 Telecommunications Parameters

The significant parameters of the 70-m antennas, which influence telecommunications link design, are contained in Tables 1 and 2. Variations of gain and system temperature due to elevation angle change and pointing error are discussed below. Telecommunications performance is also affected by atmospheric and solar effects, which are detailed in modules TCI-40, *Atmospheric and Environmental Effects*, and TCI 50, *Solar Corona and Solar Wind Effects*, respectively.

The attenuation and noise-temperature effects of weather for five specific weather conditions are included so that for those specific conditions, this module may be used without reference to module TCI-40. More comprehensive and detailed S-, X-, and Ka-band weather effects models (for weather conditions up to 98% cumulative distribution) are given in module TCI-40. The weather-included system temperature and net antenna gain curves presented in this module can be used for a quick estimate of telecommunications link performance; but, for detailed design control table use, the weather models presented in TCI-40 (revisions C and later) should be used.

Antenna gain is specified at the indicated frequency (f_R). For operation at other frequencies in the same band, the gain (dBi) scales by 20 log (f/f_R).

The operating system temperature (T_{op}) varies as a function of elevation angle due to changes in the path length through the atmosphere and the intrusion of the ground into the sidelobe pattern of the antenna. Figures 1–6 show the combined effects of these factors at L-, S-, and X-bands, respectively.

The plotted curves in each case represent the total operating system temperature (T_{op}) of the antenna in a hypothetical vacuum (no atmosphere) condition, and with 0%, 50%, and 90% weather conditions, designated as cumulative distribution (CD) = 0.00, 0.50, and 0.90. A value of 0% means minimum weather effect (exceeded 100% of the time); the 90% figure means that effect which is exceeded only 10% of the time. Qualitatively, 0% corresponds to the driest condition of the atmosphere, 25% corresponds to average clear, 50% corresponds to humid or very light clouds, and 90% corresponds to very cloudy conditions - but with no rain.

The equations and parameters for these curves (and for 25% and 80% weather) are provided in Appendix A of this module. The models use a flat-earth, horizontally stratified atmosphere approximation. At S-band (2295 MHz), the clear-sky zenith noise temperatures of each antenna are different; however, their elevation-related effects (as shown in Figure 2) are considered to be similar. Weather-effect differences are small, and the same model is used for all stations. Figure 2 shows S-band noise-temperature curves for DSS 14, LNA-1, nondiplexed. Curves for other antennas and configurations can be calculated by using the differences shown in the Table 2 noise-temperature values. The L-band system temperature curve (Figure 1) is modeled from the S-band curve, so that at zenith the 25%-weather system temperature is 35 K. At X-band (8420 MHz), DSS 43 and 63 have similar weather effects, and are subsequently illustrated in the same figure (Figure 6). DSS 14 has lower weather effects and is shown separately (Figure 5).

Tables 3–8 give S-band system noise temperatures to be expected during average clear weather conditions at elevation angles near the horizon, corresponding to rise and set azimuths of spacecraft with declinations of approximately -15° to -25°. These data were gathered specifically to support the Galileo Mission during the 1995 through 1998 period.

Tables 3 and 4 are for rise and set azimuths at DSS 14 (Goldstone) using the S-band SPD cone (the standard S-band receiving system). Tables 5 and 6 are for rise and set azimuths at DSS 43 (Canberra) using the S-band Ultracone (an additional, very low-noise S-band receiving system located on that antenna). Two-way operation (simultaneous transmit and receive) is not possible when the Ultracone is being used for reception. The standard SPD cone at DSS 43 is still available for low-noise and diplexed operation at that station, with a somewhat higher noise temperature, as given in Table 2 and Appendix A. Tables 7 and 8 give rise and set noise temperatures for DSS 63 (Madrid). The zenith system noise temperatures for all antennas are given in Table 2. Elevation angle dependence is shown for DSS 14 in Figure 2 and referenced in Appendix A. The elevation dependence of S-band noise temperature for all antennas is considered to be similar, subject to the low-elevation differences given in Tables 3–8. Figures 3 and 4 show S-band system noise temperatures at 6° elevation angle for all antennas at the eastern and western horizons for the Galileo range of rise and set azimuths.

Structural deformation causes a reduction in gain when the antenna operates at an elevation angle other than the angle of peak antenna gain. The net gain of the antenna is also reduced by atmospheric attenuation, which is a function of elevation angle and weather condition. Figure 7 shows the S-band (2295 MHz) net gains for all stations as a function of elevation angle and weather

condition, including the vacuum condition. DSS 43 gain is considered to be identical, using both the SPD cone and the ultracone. Net gain means vacuum-condition gain as reduced by atmosphere attenuation. The L-band gain curve shapes should be considered identical to the S-band curve shapes, except that they are reduced in value by the difference shown in Table 2. Figures 8–10 present the X-band (8420 MHz) effective gains of the DSS-14, -43, and -63 70-m antennas, respectively, for both vacuum condition and for three specific weather conditions defined by their cumulative distributions (CD). The equations and parameters of these curves are given in Appendix A. The models use a flat-earth, horizontally-stratified atmosphere approximation.

The gain reduction at S-and X-band due to wind loading is listed in Table 9. The gain reduction at L-band due to wind loading is negligible. The table data are for structural deformation only and presume that the antenna is maintained on-point by conical scan [(CONSCAN), discussed in module TRK-10] or an equivalent process. In addition to structural deformation, wind introduces a pointing error which is related to the antenna elevation angle, the angle between the antenna and the wind (yaw), and the wind speed. Cumulative probability distributions of wind conditions are given in module TCI-40.

Figure 11 shows the effects of pointing error on effective antenna gain (pointing loss) for the S-band transmit and the L-, S-, and X-band receive frequencies. These curves are exponential approximations, based on theoretical antenna beamwidth. Data have been normalized to eliminate elevation and wind-loading effects. The equations describing the curves are provided in Appendix A.

Table 10 provides the recommended minimum operating carrier signal levels for various combinations of low-noise amplifier and receiver bandwidths. These levels are 10 dB above the receiver threshold (design point) based on the nominal system temperatures listed in Table 2.

Figure 12 shows a functional block diagram of the 70-m antenna S- and X-band microwave and and transmitter subsystems (SPD and XRO systems).

2.3 Arraying

The 70-m antenna at each DSCC can be combined into an array, with any combination of 34-m antennas, for the purpose of improving telemetry performance. The performance of arrayed antennas is discussed in modules TLM-10 and TLM-30.

Table 1. S-band Transmit Characteristics

Parameter	Value	Remarks
ANTENNA		
Gain at 2115 MHz (dBi)	62.73 ±0.03	At gain set elevation angle, referenced to feedhorn aperture for matched polarization; no atmosphere included
Transmitter waveguide loss (dB)	0.2 ±0.02	400-kW transmitter output to feedhorn aperture
	0.3 ±0.02	20-kW transmitter output to feedhorn aperture
EIRP (dBm)	148.5 +0.0 -1.0	400-kW transmitter at feedhorn aperture
	135.4 +0.0 -1.0	20-kW transmitter at feedhorn aperture
Beamwidth (deg)	0.119 ±0.003	Half-power angular width
Ellipticity (dB) RCP or LCP	2.2 (max)	Calculated peak-to-peak voltage axial ratio
Polarization	RCP or LCP	One polarization at a time, remotely selected
Pointing loss (dB, 3-sigma)		
Angular	See TRK-10	
CONSCAN	0.03	At S-band, using X-band CONSCAN reference set for 0.1 dB loss
EXCITER AND TRANSMITTER		
Frequency ranges covered (MHz)		
Coherent with S-band D/L	2110.2 to 2117.7	
Coherent with X-band D/L	2110.2 to 2119.8	
1-dB bandwidth	2110 to 2118	

Table 1. S-band Transmit Characteristics (cont'd)

Parameter	Value	Remarks
TUNABILITY		At transmitter output frequency
Resolution (Hz)	4.8×10^{-5}	
Minimum ramp rate (Hz/s)	4.8×10^{-16}	(Calculation capability of controller)
Maximum ramp rate (Hz/s)	4.8×10^{6}	
Minimum ramp or fixed frequency duration (s)	0.1	
RF POWER OUTPUT (dBm) nominal		Referenced to transmitter output port. Setability is limited to 0.25 dB by measurement precision
20-kW power amplifier	73.0 +0.0/-1.0	
400-kW power amplifier	86.0 +0.0/-1.0	(See note at end of Table 1.)
Power output varies across the bandwidth and may be as much as 1 dB below nominal rating. Performance will also vary from tube to tube. Normal procedure is to run the tubes saturated, but unsaturated operation is also possible. The point at which saturation is achieved depends on drive power and beam voltage. The 20-kW tubes are normally saturated for power levels greater than 60 dBm (1 kW), and the 400-kW tubes are saturated above 83 dBm (200 kW). Minimum power out of the 20-kW tubes is about 53 dBm (200 W) and about 73 dBm (20 kW) for the 400-kW tubes. Efficiency of the tubes drops off rapidly below nominal rated output.		
STABILITY		
Power (dB)		
12 h	±0.5 ±1.0	saturated unsaturated
Phase ($\Delta f/f$)		
1000-s averaging	5×10^{-15}	In 1-Hz bandwidth
Group delay (ns)		
12 h	3.3	

Table 1. S-band Transmit Characteristics (cont'd)

Parameter	Value	Remarks
INCIDENTAL AM (dBc)	60	Below carrier
SPURIOUS RADIATION (dB)		
2nd harmonic	85	Below carrier
3rd harmonic	85	Below carrier
4th harmonic	-140 dBm	With 20-kW transmitter
	TBD	With 400-kW transmitter

Note: 400-kW power amplifier cannot be used below 10° elevation at all stations and between 300° and 360° azimuth at DSS 63.

Table 2. L-, S-, and X-band Receive Characteristics

Parameter	Value	Remarks
ANTENNA		
Gain (dBi)		Note: favorable (+) and adverse (-) tolerances with triangular PDF.
L-band (1668 MHz)	60.17 ±0.3	At gain set elevation angle, referenced to low-noise amplifier input terminal (includes feedline loss) for matched polarization; no atmosphere included.
S-band (2295 MHz) all stations	63.34 ±0.10	At gain set elevation angle (approximately 45°), referenced to LNA-1 input terminal (includes feedline loss) for matched polarization; no atmosphere included.
	63.28 ±0.10	At gain set elevation angle (approximately 45°), referenced to LNA-2 input terminal (includes feedline loss) for matched polarization; no atmosphere included.
X-band (8420 MHz)		
DSS 14 DSS 43 DSS 63	74.17 ±0.20 74.10 ±0.20 74.28 ±0.20	At gain set elev. angle, referenced to LNA-1 or -2 input terminal (includes feedline loss) for matched polarization; no atmosphere included.

Table 2. L-, S-, and X-band Receive Characteristics (cont'd)

Parameter	Value	Remarks
ANTENNA (cont'd)		
Beamwidth (deg)		
L-band	0.18 ±0.02	Full width at half-power points.
S-band	0.108 ±0.003	
X-band	0.031 +0.003/-0.001	
Polarization		
L-band	LCP	RCP available by changing mechanical configuration of feed.
S-band	RCP and LCP	Both polarizations available simultaneously.
X-band	RCP and LCP	Both polarizations available simultaneously.
Ellipticity (dB)		Ellipticity is defined as the ratio of peak-to-trough received voltages with rotating linearly polarized source and circularly (elliptically) polarized receiving antenna.
L-band	2.0 (max)	
S-band RCP and LCP	0.6 (max)	
X-band RCP and LCP	0.8 (max)	
		Ellipticity (dB) = 20 log (V2/V1)
Pointing loss (dB, 3-sigma)		
S-band		
angular	See TRK-10	
CONSCAN	0.03	At S-band, using X-band CONSCAN reference set for 0.1 dB loss.
	0.1	Recommended value when using S-band CONSCAN reference.
X-band		
angular	See TRK-10	
CONSCAN	0.1	Recommended value when using X-band CONSCAN reference

Table 2. L-, S-, and X-band Receive Characteristics (cont'd)

LOW-NOISE AMPLIFIERS		
Frequency ranges covered (MHz)		Only two tracking receiver channels are available, which may be operated as two receivers with any pair or combination of L-, S-, and X-band frequencies, e.g., one S and one X.
L-band, 1 dB B/W	1628 to 1708	
S-band, 1 dB B/W	2270 to 2300	
X-band, 1 dB B/W	8400 to 8500	
Recommended maximum signal power (dBm)	-90	
System noise temperature (K)		Note: Adverse (+) and favorable (-) tolerances with triangular PDF.
L-band	35 ± 2	With respect to low-noise amplifier 1 or 2 input terminal for average clear sky near zenith. See Figure 1 for elevation dependency. NOTE: average clear sky corresponds to 25% weather condition.
S-band		
LNA-1 non-diplexed		
DSS 14 SPD cone	15.2 +1.3/-0.7	With respect to LNA input. Average clear weather, zenith. See Figure 2 for elevation dependence.
DSS 43 Ultracone	11.7 +1.0/-0.0	
DSS 43 SPD cone	15.6 +1.4/-1.1	
DSS 63 SPD cone	16.9 +1.7/-1.1	
LNA-1 diplexed		
DSS 14 SPD cone	19.5 +1.3/-0.7	
DSS 43 SPD cone	19.9 +1.4/-1.1	
DSS 63 SPD cone	21.2 +1.7/-1.1	
LNA-2 nondiplexed	add 5 (±1) to nondiplexed values shown above	Tolerances to be RSS'd with tolerances shown above.
LNA-2 diplexed	add 5 (±1) to diplexed values shown above	Tolerances to be RSS'd with tolerances shown above.

Table 2. L-, S-, and X-band Receive Characteristics (cont'd)

LOW-NOISE AMPLIFIERS (cont'd) X-band LNA-1 DSS 14 DSS 43 DSS 63 LNA-2 DSS 14 DSS 43 DSS 63	 20.6 ± 2 21.0 ± 2 21.0 ± 2 20.6 ± 2 21.0 ± 2 21.0 ± 2	With respect to LNA input terrminal for average clear sky near zenith. See Figures 5 and 6 for elevation dependence.
REFERENCE CHANNEL NOISE B/W (Hz)	1 ± 10% 3 ± 10% 10 ± 10% 30 ± 10% 100 ± 10% 300 ± 10%	Effective two-sided threshold (design point) noise bandwidth ($2B_{Lo}$) 1-Hz bandwidth is not available at X-band

Table 3. DSS 14 Eastern Horizon S-band T_{OP} with SPD Cone

ELEV																					
20.0	21.0	21.1	21.0	21.0	21.0	21.1	21.0	21.0	21.0	21.1	21.1	21.2	21.1	21.1	21.1	21.1	21.1	21.1	21.1	21.1	21.1
19.0	21.5	21.5	21.5	21.5	21.5	21.5	21.6	21.7	21.7	21.7	21.6	21.6	21.7	21.7	21.7	21.8	21.8	21.7	21.6	21.6	21.6
18.0	22.1	22.0	22.0	22.0	22.0	21.9	21.9	22.0	22.0	22.0	22.1	22.0	22.0	22.0	22.1	22.1	22.0	22.0	22.0	21.9	22.0
17.0	22.3	22.2	22.2	22.2	22.1	22.2	22.2	22.3	22.2	22.2	22.2	22.2	22.2	22.2	22.2	22.2	22.3	22.2	22.2	22.3	22.3
16.0	22.7	22.7	22.7	22.6	22.7	22.6	22.6	22.6	22.7	22.7	22.6	22.7	22.7	22.7	22.6	22.7	22.7	22.7	22.7	22.9	23.0
15.0	23.2	23.2	23.2	23.2	23.2	23.2	23.3	23.3	23.2	23.3	23.4	23.5	23.5	23.5	23.5	23.5	23.6	23.6	23.6	23.6	23.7
14.0	23.7	23.7	23.7	23.8	23.8	23.8	23.9	23.9	23.9	24.0	24.1	24.1	24.0	24.0	24.0	24.0	24.1	24.3	24.3	24.2	24.2
13.0	24.6	24.5	24.5	24.6	24.6	24.5	24.5	24.6	24.6	24.6	24.6	24.7	24.7	24.7	24.8	24.8	24.7	24.8	24.8	24.9	24.9
12.0	25.2	25.2	25.2	25.2	25.2	25.2	25.3	25.3	25.3	25.4	25.4	25.3	25.4	25.4	25.3	25.3	25.4	25.4	25.4	25.5	25.5
11.0	26.0	26.1	26.1	26.1	26.0	26.1	26.1	26.1	26.1	26.1	26.2	26.2	26.2	26.2	26.2	26.2	26.3	26.3	26.3	26.4	26.5
10.0	27.1	27.2	27.2	27.1	27.2	27.1	27.2	27.2	27.1	27.2	27.2	27.3	27.3	27.3	27.4	27.3	27.3	27.4	27.4	27.5	27.4
9.5	27.4	27.5	27.5	27.6	27.5	27.6	27.6	27.6	27.6	27.6	27.6	27.7	27.8	27.6	27.7	27.7	27.8	27.9	28.0	27.9	28.0
9.0	27.9	27.8	28.2	28.2	27.8	27.8	27.8	27.8	27.8	27.9	27.9	28.0	28.0	28.0	28.0	28.1	28.1	28.5	28.5	28.2	28.2
8.5	29.2	29.2	29.1	29.1	29.2	29.1	29.0	29.0	29.1	29.1	29.1	29.1	29.2	29.3	29.5	29.5	29.4	29.3	29.4	29.5	29.5
8.0	29.6	29.6	29.7	29.7	29.9	29.9	29.8	29.7	29.8	29.8	29.8	30.0	30.0	29.9	29.9	29.9	29.9	30.0	30.0	30.1	30.1
7.5	30.4	30.3	30.3	30.4	30.4	30.4	30.5	30.4	30.4	30.5	30.4	30.5	30.8	30.6	30.6	30.7	30.7	30.7	30.8	30.8	30.9
7.0	31.1	31.2	31.2	31.2	31.2	31.4	31.4	31.2	31.3	31.3	31.3	31.3	31.3	31.4	31.4	31.4	31.5	31.5	31.5	31.6	31.7
6.5	32.1	32.2	32.5	32.3	32.3	32.6	32.4	32.4	32.4	32.5	32.5	32.6	32.5	32.5	32.5	32.6	32.7	32.6	32.7	32.8	32.8
6.0	32.3	32.8	33.0	33.0	33.0	33.0	33.1	33.2	33.2	33.2	33.3	33.3	33.3	33.3	33.3	33.4	33.5	33.6	33.6	33.6	33.8
AZ >>	110	111	112	113	114	115	116	117	118	119	120	121	122	123	124	125	126	127	128	129	130
ELEV																					
20.0	21.1	21.1	21.1	21.1	21.1	21.2	21.2	21.7	21.6	21.1	21.2	21.2	21.2	21.2	21.1	21.1	21.2	21.2	21.2	21.2	21.2
19.0	21.6	21.6	21.6	21.6	21.6	21.6	21.5	21.7	22.1	21.8	21.6	21.8	22.0	21.6	21.6	22.1	21.9	21.6	21.6	21.6	21.6
18.0	22.0	22.0	21.9	21.9	21.9	22.0	22.0	21.9	22.0	22.1	22.1	22.1	22.5	22.6	22.1	22.2	22.8	22.5	22.1	22.3	22.8
17.0	22.3	22.4	22.5	22.6	22.5	22.5	22.5	22.4	22.5	22.5	22.6	22.6	22.6	22.6	22.5	22.5	22.5	22.6	22.5	22.6	22.7
16.0	23.0	22.8	22.8	22.9	22.9	22.9	23.0	23.0	23.1	23.1	23.1	23.2	23.3	23.2	23.1	23.3	23.3	23.1	23.1	23.2	23.2
15.0	23.7	23.6	23.6	23.7	23.6	23.6	23.6	23.7	23.7	23.7	23.8	23.8	23.8	23.8	23.8	23.7	23.7	23.8	23.8	23.7	23.7
14.0	24.2	24.2	24.2	24.2	24.5	24.9	24.6	24.5	24.5	24.5	24.5	24.4	24.4	24.5	24.5	24.5	24.5	24.7	25.0	24.6	24.6
13.0	24.9	24.9	25.0	25.0	25.1	25.2	25.0	24.8	25.0	25.1	25.2	25.2	25.3	25.3	25.3	25.3	25.3	25.5	25.5	25.5	25.5
12.0	25.5	25.5	25.5	25.6	25.6	25.6	25.6	25.6	25.7	25.7	25.7	25.8	25.8	25.9	25.9	25.9	25.9	26.0	26.0	26.0	26.1
11.0	26.5	26.5	26.5	26.9	27.5	26.8	26.8	27.3	26.8	26.6	26.6	26.7	26.6	26.7	26.7	26.7	26.7	26.8	26.9	26.9	26.9
10.0	27.4	27.5	27.5	27.7	27.7	27.6	27.7	27.7	27.7	27.8	27.8	27.9	27.8	27.8	27.7	27.9	27.9	27.9	27.9	28.0	28.1
9.5	28.0	28.0	28.1	28.1	28.2	28.1	28.1	28.1	28.1	28.2	28.2	28.3	28.3	28.3	28.4	28.4	28.4	28.5	28.4	28.4	28.4
9.0	28.2	28.3	28.3	28.4	28.4	28.4	28.5	28.5	28.6	28.6	28.5	28.6	28.7	28.8	28.7	28.8	28.8	28.9	28.9	28.9	28.9
8.5	29.5	29.6	29.7	29.6	29.7	29.9	29.9	29.9	30.0	29.6	29.9	30.1	29.8	29.8	30.0	30.0	29.9	29.9	30.0	30.0	30.0
8.0	30.1	30.1	30.2	30.2	30.3	30.5	30.4	30.3	30.4	30.5	30.4	30.5	30.4	30.3	30.5	30.6	30.6	30.6	30.6	30.7	30.8
7.5	30.9	30.9	30.9	31.1	31.2	31.2	31.2	31.2	31.3	31.4	31.5	31.4	31.4	31.4	31.5	31.5	31.5	31.5	31.6	31.7	31.8
7.0	31.7	31.8	31.9	31.8	32.0	32.1	32.1	32.2	32.1	32.0	32.1	32.2	32.2	32.2	32.2	32.2	32.3	32.4	32.5	32.8	32.9
6.5	32.8	32.9	32.9	33.0	33.1	33.2	33.2	33.2	33.2	33.3	33.6	33.5	33.4	33.4	33.4	33.5	33.6	33.7	33.9	34.1	34.2
6.0	33.8	33.8	33.8	34.0	34.0	34.0	34.1	34.1	34.1	34.3	34.3	34.4	34.4	34.5	34.6	34.6	34.7	34.8	35.0	35.2	35.4
AZ >>	130	131	132	133	134	135	136	137	138	139	140	141	142	143	144	145	146	147	148	149	150

Table 4. DSS 14 Western Horizon S-band T_{OP} with SPD Cone

ELEV																					
9.0	29.7	30.0	31.0	32.0	31.5	30.6	30.0	29.6	29.3	29.3	29.2	29.1	29.0	29.0	28.8	29.0	29.0	29.1	29.0	29.0	29.0
8.5	31.0	31.3	32.3	32.3	31.2	30.6	30.3	30.0	29.9	29.7	29.7	29.7	29.6	29.6	29.5	29.5	29.5	29.5	29.5	29.5	29.5
8.0	27.2	31.5	31.9	33.1	33.8	32.4	31.3	31.1	31.0	30.7	30.6	30.5	30.5	30.8	30.4	30.3	30.4	30.7	30.5	30.4	30.5
7.5	34.7	34.9	34.9	34.9	34.5	33.3	32.3	32.0	31.7	31.4	31.3	31.2	31.2	31.2	31.2	31.2	31.1	31.0	30.9	31.0	31.1
7.0	34.3	34.3	34.3	34.2	34.2	34.2	33.8	33.0	32.5	32.2	32.1	31.7	31.9	31.9	31.9	31.8	31.8	31.8	31.7	31.7	31.8
6.5	34.4	34.3	34.2	34.3	34.2	33.8	33.4	33.0	32.9	33.0	32.8	32.8	32.8	32.8	33.0	32.8	32.8	32.7	32.7	32.7	32.7
6.0	34.6	34.1	34.7	34.8	34.8	34.7	34.4	34.0	33.8	33.7	33.7	33.7	33.7	33.7	33.6	33.6	33.6	33.5	33.6	33.5	33.6
AZ >>	210	211	212	213	214	215	216	217	218	219	220	221	222	223	224	225	226	227	228	229	230
ELEV																					
9.0	29.0	28.9	28.9	28.9	29.1	29.1	28.9	29.1	29.4	28.9	28.8	28.8	28.8	28.7	28.8	28.8	28.7	28.7	28.8	28.9	29.0
8.5	29.5	29.4	29.4	29.4	29.5	29.7	29.5	29.5	29.4	29.3	29.4	29.4	29.4	29.4	29.4	29.4	29.4	29.5	29.5	29.5	29.5
8.0	30.5	30.3	30.2	30.2	30.1	30.2	30.2	29.9	30.0	30.1	30.2	30.2	30.2	30.1	30.1	30.1	30.0	30.1	30.2	30.2	30.3
7.5	31.1	31.0	31.0	31.0	30.9	30.9	30.9	31.0	31.0	30.9	30.6	30.9	31.1	31.0	31.0	31.1	30.9	30.9	30.9	30.7	30.5
7.0	31.8	31.8	31.7	31.7	31.8	31.8	31.7	31.7	31.7	31.7	31.7	31.7	31.6	31.6	31.6	31.4	31.6	31.7	31.7	31.6	31.7
6.5	32.7	32.6	32.6	32.6	32.6	32.6	32.6	32.6	32.6	32.6	32.6	32.5	32.5	32.6	32.6	32.5	32.5	32.5	32.6	32.5	32.5
6.0	33.6	33.7	33.6	33.7	33.9	33.9	33.8	33.8	33.9	33.8	33.8	33.8	33.8	33.7	33.7	33.7	33.7	33.7	33.8	33.8	33.8
AZ >>	230	231	232	233	234	235	236	237	238	239	240	241	242	243	244	245	246	247	248	249	250

Table 5. DSS 43 Eastern Horizon S-band T_{OP} with Ultracone

ELEV																					
20.0	19.0	18.7	18.2	18.9	18.4	18.7	19.0	18.8	18.4	18.7	18.8	18.5	18.2	18.9	18.6	18.7	18.3	19.0	18.3	18.1	18.7
19.0	19.4	19.5	19.3	19.2	19.5	20.1	19.6	19.4	19.3	19.3	18.9	18.7	19.2	19.4	18.8	19.4	19.0	19.0	18.9	19.1	18.8
18.0	20.3	20.0	20.2	19.6	19.7	19.9	20.1	20.2	20.1	19.9	20.2	19.6	20.2	20.1	19.9	19.8	19.6	19.5	20.0	19.6	19.4
17.0	21.1	21.2	20.4	20.6	20.9	20.4	21.2	20.8	21.2	21.1	20.7	20.9	20.8	20.4	20.4	20.9	20.9	20.3	20.2	20.3	20.7
16.0	21.5	21.5	21.1	21.7	21.3	21.5	21.4	21.6	21.4	21.1	21.6	21.3	21.6	21.3	21.4	21.5	21.5	21.2	21.2	20.7	21.0
15.0	22.8	22.7	22.0	22.4	22.2	22.3	22.0	22.7	22.1	22.7	22.3	22.2	22.4	22.3	21.6	22.1	22.3	22.3	22.0	21.8	21.8
14.0	23.3	23.6	23.2	23.5	23.5	23.0	23.3	23.1	23.1	23.2	23.2	23.5	23.3	23.3	22.8	22.9	23.0	23.1	22.4	22.8	22.4
13.0	24.3	23.7	24.0	24.3	23.8	24.6	24.1	23.7	24.0	24.3	23.7	23.9	23.9	24.1	23.8	23.8	23.7	23.8	24.0	23.5	23.6
12.0	25.1	25.3	25.2	25.7	25.2	25.5	25.4	25.4	25.2	25.6	25.1	25.3	25.0	25.0	24.9	25.0	25.1	24.9	24.4	24.8	24.6
11.0	26.5	26.9	26.4	26.0	26.1	26.7	26.3	26.9	27.5	26.8	27.1	27.5	26.9	26.8	27.0	26.0	26.0	26.1	26.0	25.9	25.8
10.0	33.6	32.8	30.6	29.7	29.4	29.4	30.1	33.3	39.9	51.4	58.3	59.1	56.1	48.6	37.1	30.7	28.7	27.8	28.0	27.3	27.2
9.5	50.5	50.1	46.9	41.7	38.5	39.2	45.0	53.9	67.5	82.2	94.3	98.1	94.0	82.4	67.3	53.3	40.3	31.7	29.9	29.0	27.7
9.0	77.0	76.1	71.6	66.6	65.0	69.7	80.5	96.0	114	131	141	142	133	116	96.4	77.9	60.4	45.8	38.6	34.1	31.3
8.5	111	112	111	107	104	104	112	125	143	161	177	187	184	173	155	134	111	90.9	75.1	64.4	54.6
8.0	151	150	148	145	146	151	161	177	195	211	222	223	215	201	182	160	141	124	109	96.9	82.2
7.5	190	191	191	188	185	187	195	207	222	234	240	240	238	236	227	211	195	178	165	153	134
7.0	219	220	220	218	216	220	227	236	240	242	242	241	240	240	238	232	222	212	203	190	171
6.5	235	236	237	237	236	236	239	240	243	244	244	243	242	241	241	242	241	238	236	230	220
6.0	239	240	239	239	240	240	241	242	243	243	243	243	242	241	242	242	242	241	241	239	233
AZ >>	90	91	92	93	94	95	96	97	98	99	100	101	102	103	104	105	106	107	108	109	110
ELEV																					
20.0	18.7	18.3	18.3	17.7	18.1	17.4	17.9	17.7	18.1	17.6	18.0	17.6	17.4	17.5	17.5	18.0	17.9	17.9	17.2	17.5	17.7
19.0	18.8	18.7	18.9	18.9	19.0	18.3	18.8	18.4	18.5	18.7	18.4	17.8	18.3	17.9	18.6	18.0	18.1	17.9	18.0	18.2	17.8
18.0	19.4	19.8	19.5	19.7	19.2	19.5	19.0	18.8	19.2	18.8	18.9	18.9	18.8	18.9	18.9	18.7	18.5	18.9	18.5	18.7	18.9
17.0	20.7	20.1	20.3	19.9	20.3	19.6	20.5	19.6	19.6	19.6	19.8	19.8	19.5	19.5	19.6	19.5	19.4	19.3	19.5	19.0	18.7
16.0	21.0	20.8	21.3	20.9	20.8	20.9	20.7	20.1	20.4	20.8	20.3	19.8	20.4	19.8	20.2	19.8	19.9	20.1	19.7	20.0	20.9
15.0	21.8	21.6	21.6	21.5	21.5	21.5	21.3	21.5	21.3	21.0	21.3	21.3	20.9	20.9	21.3	20.9	20.9	20.6	20.8	20.7	20.3
14.0	22.4	22.4	22.4	22.7	22.4	22.4	22.2	22.2	22.3	22.1	22.1	21.6	21.9	21.7	21.8	21.7	21.9	21.7	21.1	21.3	21.1
13.0	23.6	24.0	23.2	23.3	23.3	23.2	23.1	22.9	23.0	23.0	23.0	23.7	22.7	22.5	23.2	22.4	22.3	22.2	22.6	22.8	22.1
12.0	24.6	24.3	23.8	24.3	24.3	24.2	24.1	23.9	24.2	23.4	23.8	23.3	23.7	24.0	23.8	23.8	23.5	23.6	23.5	23.3	23.3
11.0	25.8	25.8	25.5	25.5	25.3	24.9	25.1	25.2	25.3	24.6	25.0	24.9	24.6	25.3	24.9	25.2	24.6	24.8	24.3	24.8	25.1
10.0	27.2	27.3	27.1	26.3	26.5	26.4	26.2	26.8	26.1	26.1	26.0	26.3	26.2	26.4	26.3	27.3	28.0	27.3	26.4	26.2	26.2
9.5	27.7	28.5	28.4	27.1	27.8	27.2	27.0	27.0	26.7	26.6	27.0	26.4	26.7	27.2	26.6	26.9	26.5	26.9	26.8	26.5	26.5
9.0	31.3	29.7	28.8	28.8	28.6	28.2	28.2	27.9	28.0	27.9	27.7	27.2	27.5	27.5	27.4	27.5	27.2	27.5	27.5	27.5	26.7
8.5	54.6	41.6	33.6	30.0	29.7	29.0	28.8	29.1	29.2	28.7	28.5	28.5	28.4	28.7	28.6	28.4	28.9	28.5	28.9	28.4	28.2
8.0	82.2	63.6	46.3	36.1	31.6	30.5	29.8	29.5	30.0	29.7	29.5	29.3	29.5	29.6	29.6	29.4	30.4	30.0	30.4	29.6	29.9
7.5	134	113	89.0	68.0	50.8	38.0	33.1	31.4	31.1	31.5	31.4	30.8	31.3	31.5	31.5	31.4	31.4	31.3	31.8	31.4	31.5
7.0	171	147	122	96.9	74.1	52.7	37.1	34.0	33.2	33.8	33.5	33.3	34.1	33.8	33.9	34.3	34.0	33.4	33.8	33.6	32.7
6.5	220	200	178	153	126	99.5	72.0	48.4	38.2	36.2	36.9	37.4	37.6	39.6	41.2	42.5	41.4	38.5	37.2	36.0	36.7
6.0	233	219	199	175	148	116	85.7	61.1	46.9	42.7	42.8	46.3	52.5	60.2	64.6	63.4	56.7	48.6	43.0	40.0	39.4
AZ >>	110	111	112	113	114	115	116	117	118	119	120	121	122	123	124	125	126	127	128	129	130

Table 6. DSS 43 Western Horizon S-band T_{OP} with Ultracone

ELEV																					
20.0	17.4	17.3	17.4	17.5	17.3	17.6	17.4	17.5	17.7	17.5	17.5	17.5	17.4	17.6	17.7	17.4	17.6	17.6	17.5	17.6	17.5
19.0	18.0	18.0	18.2	18.1	18.2	18.2	18.1	18.2	18.1	18.3	18.3	18.2	18.3	18.5	18.3	18.2	18.1	18.2	18.3	18.3	18.2
18.0	18.7	18.6	18.7	18.7	18.8	19.0	18.8	18.7	18.9	19.0	19.0	18.9	18.9	19.0	18.8	18.9	18.9	18.8	18.9	18.9	18.7
17.0	19.4	19.3	19.5	19.4	19.4	19.4	19.4	19.6	19.5	19.4	19.6	19.5	19.6	19.4	19.5	19.4	19.4	19.5	19.3	19.5	19.5
16.0	20.0	20.1	20.0	20.2	20.4	20.2	20.2	20.3	20.3	20.2	20.3	20.3	20.2	20.1	20.2	20.2	20.4	20.1	20.2	20.1	20.3
15.0	20.9	20.9	21.0	20.9	21.0	21.0	21.0	21.0	21.1	21.1	21.0	21.1	21.1	21.1	21.0	21.0	21.0	20.9	21.1	21.2	20.9
14.0	21.9	21.7	21.6	21.6	21.6	21.7	21.9	21.8	21.9	21.8	21.9	21.9	22.0	21.9	21.9	21.9	21.9	21.8	21.8	21.7	21.7
13.0	22.5	22.5	22.7	22.6	22.6	22.6	22.6	22.7	22.6	22.7	22.7	22.8	22.8	22.6	22.8	22.7	22.7	22.7	22.8	22.7	22.5
12.0	23.5	23.4	23.4	23.5	23.5	23.6	23.7	23.6	23.7	23.6	23.9	23.7	23.8	23.9	23.8	23.9	23.8	23.7	23.7	23.7	23.7
11.0	24.9	25.0	25.1	25.2	25.1	25.2	25.3	25.4	25.3	25.4	25.2	25.3	25.4	25.4	25.5	25.5	25.4	25.3	25.3	25.2	25.0
10.5	25.1	25.2	25.1	25.4	25.4	25.7	25.6	26.1	26.8	26.8	26.4	26.0	26.5	27.1	26.5	26.7	27.5	27.3	26.0	25.6	25.7
10.0	25.9	26.0	26.6	27.4	27.4	27.4	28.8	31.4	32.0	31.4	29.7	29.5	32.1	31.2	29.8	32.8	32.7	29.0	27.4	27.1	27.1
9.5	27.7	28.0	28.0	30.3	32.8	32.6	33.0	35.3	38.6	39.3	39.6	37.0	36.8	38.5	37.9	37.4	39.3	37.8	34.2	31.4	30.4
9.0	34.0	34.4	36.4	39.4	41.2	43.7	44.5	48.0	48.5	50.3	51.3	50.0	48.5	49.1	50.2	49.5	47.8	45.0	42.6	38.6	39.7
8.5	40.4	42.8	46.5	49.5	50.5	55.0	58.7	61.3	62.0	61.9	66.7	66.1	64.4	62.8	65.7	65.2	62.0	58.4	57.6	55.5	51.1
8.0	54.6	59.7	64.4	63.2	69.2	74.6	77.7	78.2	78.3	83.9	85.0	83.5	80.8	83.2	84.1	80.1	74.8	73.4	73.7	68.4	64.1
7.5	68.6	70.0	78.1	81.7	80.5	88.8	94.6	97.3	96.4	98.6	104	106	103	101	104	104	96.4	92.0	92.6	92.1	85.5
7.0	86.7	92.7	101	98.8	103	112	118	116	118	121	128	125	123	124	127	120	112	113	113	110	103
6.5	106	111	120	120	121	130	138	137	138	141	145	149	145	144	147	146	138	133	135	133	127
6.0	129	136	143	141	144	154	159	159	161	164	170	168	166	168	169	166	159	155	156	152	145
AZ >>	230	231	232	233	234	235	236	237	238	239	240	241	242	243	244	245	246	247	248	249	250
ELEV																					
20.0	17.5	17.6	17.3	17.6	17.3	17.4	17.4	17.5	17.4	17.4	17.4	17.4	17.4	17.4	17.3	17.5	17.5	17.4	17.3	17.4	17.6
19.0	18.2	18.2	18.2	18.1	18.1	18.2	18.0	18.1	18.0	18.0	18.0	18.1	18.1	18.0	18.0	17.9	17.9	17.9	17.9	17.8	18.0
18.0	18.7	18.9	18.8	18.8	18.9	18.8	18.8	18.7	18.6	18.6	18.6	18.6	18.6	18.6	18.5	18.6	18.5	18.6	18.5	18.5	18.6
17.0	19.5	19.3	19.1	19.5	19.4	19.3	19.2	19.2	19.1	19.2	19.3	19.2	19.2	19.2	18.9	19.0	19.1	19.2	19.0	19.0	19.0
16.0	20.3	20.3	20.2	20.2	20.0	20.1	20.1	20.1	20.0	20.0	20.0	19.9	20.0	19.9	19.9	19.8	19.9	19.8	19.7	19.8	19.4
15.0	20.9	20.8	21.0	21.0	20.9	20.9	20.9	20.8	20.8	20.9	20.9	20.9	20.9	20.8	20.6	20.7	20.7	20.5	20.5	20.6	20.4
14.0	21.7	21.8	21.9	21.6	21.8	21.7	21.7	21.7	21.7	21.8	21.5	21.7	21.7	21.7	21.5	21.4	21.5	21.4	21.5	21.4	21.5
13.0	22.5	22.7	22.6	22.6	22.6	22.6	22.6	22.6	22.6	22.5	22.6	22.6	22.6	22.5	22.4	22.4	22.3	22.3	22.5	22.2	22.5
12.0	23.7	23.8	23.7	23.8	23.6	23.6	23.7	23.6	23.6	23.5	23.5	23.6	23.5	23.6	23.5	23.4	23.4	23.3	23.4	23.3	23.0
11.0	25.0	25.1	25.1	24.9	24.9	24.8	24.8	24.8	24.6	24.7	24.7	24.4	24.6	24.5	24.5	24.4	24.5	24.4	24.3	24.3	24.3
10.5	25.7	25.7	25.7	25.6	25.5	25.3	25.4	25.3	25.2	25.3	25.1	25.2	25.0	25.0	24.9	24.9	25.0	24.9	24.9	24.8	24.7
10.0	27.1	27.5	27.4	26.5	26.7	26.5	26.1	25.9	25.9	25.8	25.7	25.8	25.7	25.7	25.6	25.6	25.8	25.6	25.5	25.4	25.3
9.5	30.4	32.1	33.2	30.6	29.3	30.2	28.6	27.2	26.7	26.7	26.6	26.4	26.4	26.5	26.3	26.2	26.3	26.2	26.2	26.1	25.8
9.0	39.7	41.0	38.4	35.8	35.6	33.3	30.1	28.3	27.8	27.5	27.4	27.3	27.3	27.1	27.0	26.9	27.1	27.0	26.9	26.9	27.0
8.5	51.1	50.5	48.8	48.4	46.3	40.9	36.3	35.3	31.3	29.2	28.4	28.3	28.1	28.0	27.8	27.8	27.8	27.8	27.7	27.7	27.5
8.0	64.1	62.9	64.0	61.1	55.9	48.5	47.5	43.9	37.2	31.9	29.7	29.2	29.1	28.8	29.1	28.7	28.8	28.6	28.8	28.6	28.5
7.5	85.5	81.1	80.2	80.4	76.0	68.0	63.1	59.9	51.8	43.3	36.1	32.1	30.6	30.4	30.2	30.1	30.2	30.0	30.2	29.8	30.0
7.0	103	98.4	98.6	97.8	91.3	82.9	79.6	71.7	61.1	52.0	43.8	36.9	33.9	32.5	31.6	31.3	31.3	31.2	31.1	31.2	31.2
6.5	127	119	118	119	115	105	101	93.9	81.0	71.1	61.7	52.4	44.8	40.8	35.9	33.9	33.3	32.9	32.8	32.8	32.8
6.0	145	140	140	141	132	125	120	109	96.1	86.0	76.4	65.8	57.0	52.2	45.1	39.0	37.2	37.5	36.9	35.7	35.4
AZ >>	250	251	252	253	254	255	256	257	258	259	260	261	262	263	264	265	266	267	268	269	270

Table 7. DSS 63 Eastern Horizon S-band T_{OP} with SPD Cone

ELEV																					
40.0	18.4	18.6	18.5	18.4	18.5	18.3	18.1	18.1	18.1	18.1	18.1	18.3	18.3	18.4	18.2	18.1	18.2	18.2	18.2	18.2	18.2
35.0	18.7	18.7	18.8	18.7	18.7	18.7	18.6	18.6	18.6	18.6	18.5	18.5	18.5	18.5	18.5	18.4	18.5	18.5	18.5	18.5	18.6
30.0	18.9	19.0	19.1	19.0	19.0	19.0	18.9	19.1	19.0	19.0	19.0	19.1	19.0	19.0	19.2	19.1	19.1	19.1	19.3	19.2	19.1
25.0	20.0	19.9	20.1	20.1	20.1	20.1	20.1	20.0	20.0	20.0	19.9	19.9	20.0	19.9	19.8	19.7	19.8	19.8	19.8	19.8	19.9
20.0	21.5	21.5	21.6	21.7	21.6	21.7	21.7	21.8	21.7	21.6	21.4	21.4	21.4	21.5	21.7	21.8	21.8	21.7	21.5	21.5	21.6
19.0	21.8	21.8	21.9	21.9	21.9	21.9	21.9	21.9	21.9	22.0	22.1	22.1	22.3	22.0	22.1	21.9	21.9	21.8	21.7	21.9	21.9
18.0	22.8	22.9	22.9	23.2	23.3	23.0	23.1	23.0	22.9	23.0	22.8	23.0	22.9	23.0	23.0	22.9	22.8	22.9	22.7	22.7	22.6
17.0	22.8	22.8	22.8	23.0	22.8	22.7	22.9	22.9	22.8	23.0	23.0	22.9	23.1	23.0	22.9	23.0	23.1	22.9	22.8	23.0	23.0
16.0	23.9	24.1	24.2	24.1	23.8	24.0	24.0	23.9	23.7	23.6	23.7	23.5	23.5	23.7	23.6	23.5	23.6	23.5	23.4	23.4	23.6
15.0	24.4	24.4	24.4	24.4	24.5	24.4	24.4	24.3	24.4	24.2	24.5	24.4	24.5	24.6	24.7	24.7	24.7	24.7	24.7	24.8	24.7
14.0	25.0	24.9	25.1	25.1	25.1	25.1	25.3	25.3	25.2	25.3	25.3	25.3	25.3	25.3	25.2	25.2	25.3	25.2	25.3	25.3	25.3
13.0	26.2	26.2	26.2	26.2	26.2	26.3	26.2	26.3	26.3	26.4	26.3	26.2	26.3	26.4	26.3	26.3	26.0	26.0	26.1	26.2	26.2
12.0	27.4	27.5	27.6	27.4	27.3	27.4	27.3	27.4	27.3	27.1	27.3	27.1	27.1	27.2	27.2	27.2	27.3	27.4	27.5	27.5	27.4
11.0	28.1	28.2	28.1	28.1	27.9	27.9	28.0	28.0	27.9	28.0	28.1	28.0	27.9	28.0	27.7	28.0	28.1	28.2	28.0	28.0	27.7
10.0	30.2	30.1	29.9	30.0	29.8	29.9	29.7	29.8	29.6	29.4	29.3	29.3	29.2	29.1	29.0	29.0	29.2	29.1	29.2	29.3	29.2
9.5	30.3	30.3	30.3	30.2	30.2	30.0	30.2	30.0	30.1	30.1	29.8	29.7	29.5	29.5	29.4	29.4	29.6	29.5	29.4	29.5	29.5
9.0	30.3	30.3	30.6	30.1	30.1	30.3	30.2	30.3	30.4	30.2	30.0	30.0	29.8	29.8	29.8	29.8	29.9	29.8	30.0	30.1	30.1
8.5	31.1	31.3	31.1	30.9	30.8	30.7	30.8	30.9	31.1	31.1	31.3	31.2	31.1	31.1	31.1	31.1	31.2	31.0	31.0	31.0	31.2
8.0	32.2	32.5	32.6	32.4	32.6	32.4	32.6	32.3	32.6	32.4	32.3	32.3	32.5	32.5	32.6	32.5	32.5	32.4	32.4	32.3	32.2
7.5	33.2	33.4	33.4	33.2	33.2	33.3	33.5	33.5	33.6	33.5	33.4	33.3	33.4	33.6	33.5	33.5	33.4	33.4	33.4	33.4	33.3
7.0	34.6	34.6	34.5	34.3	34.4	34.4	34.5	34.4	34.6	34.6	34.6	34.7	34.6	34.8	34.7	34.3	34.6	34.6	34.5	34.7	34.8
6.5	35.8	36.3	36.0	36.2	35.9	36.0	36.0	35.8	35.9	35.9	35.9	35.9	35.8	35.7	36.1	35.8	35.6	35.7	35.6	35.8	35.8
6.0	37.5	37.6	37.6	37.5	37.6	37.5	37.5	37.3	37.2	37.2	37.3	37.4	37.2	37.2	37.3	37.2	37.1	37.0	37.2	37.0	37.1
AZ >>	110	111	112	113	114	115	116	117	118	119	120	121	122	123	124	125	126	127	128	129	130
ELEV																					
40.0	18.2	18.3	18.3	18.3	18.3	18.3	18.3	18.4	18.4	18.4	18.1	18.0	18.1	18.1	18.2	18.2	18.4	18.5	18.5	18.3	18.3
35.0	18.6	18.5	18.5	18.7	18.7	18.7	18.9	18.9	18.9	18.8	18.7	18.6	18.5	18.4	18.5	18.5	18.6	18.7	18.7	18.8	18.8
30.0	19.1	19.2	19.1	19.3	19.1	19.2	19.3	19.3	19.2	19.3	19.1	19.1	19.0	19.2	19.1	19.0	19.2	19.1	19.2	19.2	19.1
25.0	19.9	19.9	20.0	20.0	20.1	20.1	20.2	20.1	20.0	20.0	20.0	19.9	19.9	19.9	19.9	19.9	19.7	19.8	20.1	20.1	20.0
20.0	21.6	21.6	21.7	21.6	21.7	21.8	21.8	21.8	21.9	21.6	21.7	21.8	21.7	21.7	21.6	21.6	21.7	21.9	21.8	21.7	21.7
19.0	21.9	22.0	22.0	22.0	21.9	22.0	22.3	22.1	22.2	22.1	22.0	22.0	22.0	22.1	22.1	22.3	22.3	22.2	22.3	22.2	22.1
18.0	22.6	22.6	22.7	22.4	22.7	22.7	22.6	22.7	22.8	22.8	22.8	22.8	22.8	22.6	22.6	22.5	22.4	22.6	22.7	22.7	22.6
17.0	23.0	22.9	22.9	22.8	22.9	22.9	22.9	22.8	22.9	22.9	23.1	23.2	23.4	23.5	23.5	23.5	23.5	23.4	23.4	23.5	23.5
16.0	23.6	23.5	23.5	23.3	23.2	23.3	23.4	23.7	23.6	23.7	23.8	23.8	23.7	23.7	23.8	24.0	23.8	23.9	24.1	24.3	24.1
15.0	24.7	24.6	24.5	24.7	24.8	24.7	24.6	24.6	24.6	24.5	24.3	24.2	24.1	24.4	24.6	24.4	24.5	24.4	24.3	24.3	24.3
14.0	25.3	25.3	25.4	25.5	25.3	25.2	25.4	25.3	25.2	25.3	25.3	25.4	25.4	25.4	25.6	25.5	25.5	25.6	25.3	25.3	25.2
13.0	26.2	26.1	26.1	26.3	26.4	26.3	26.2	26.4	26.3	26.3	26.3	26.4	26.2	26.1	26.1	26.1	26.2	26.4	26.3	26.3	26.3
12.0	27.4	27.3	27.4	27.5	27.2	27.4	27.2	27.4	27.1	27.2	27.0	27.0	26.9	27.1	26.9	27.1	26.8	26.9	26.8	27.0	27.2
11.0	27.7	28.0	28.1	27.9	27.8	27.9	28.1	28.2	28.6	28.7	28.6	28.7	28.8	28.9	28.9	28.8	28.8	28.7	28.9	28.8	28.7
10.0	29.2	29.3	29.1	29.2	29.3	29.2	29.3	29.4	29.3	29.3	29.2	29.1	29.2	29.2	29.1	29.1	29.1	29.2	29.3	29.3	29.4
9.5	29.5	29.3	29.5	29.5	29.2	29.5	29.4	29.2	29.5	29.5	29.2	29.1	29.4	29.2	29.2	29.4	29.3	29.4	29.4	29.3	29.4
9.0	30.1	30.2	30.3	30.3	30.6	30.4	30.4	30.6	30.6	30.6	30.4	30.4	30.6	30.6	30.5	30.4	30.5	30.4	30.1	30.3	30.1
8.5	31.2	31.1	30.9	31.0	30.9	30.7	30.6	30.4	30.3	30.2	30.5	30.5	30.6	30.5	30.3	30.2	30.2	30.3	30.4	30.5	30.7
8.0	32.2	31.9	31.7	31.9	31.8	31.9	31.8	31.7	31.6	31.5	31.5	32.0	31.6	31.5	31.3	31.8	31.8	31.4	31.5	31.3	31.1
7.5	33.3	33.4	33.3	33.1	33.1	33.0	32.9	32.5	32.8	32.6	32.8	32.7	32.8	32.9	32.8	32.8	32.7	32.6	32.7	32.7	32.7
7.0	34.8	34.6	34.7	34.6	34.5	34.3	34.3	34.1	34.1	34.1	33.9	33.8	33.8	33.8	34.2	33.8	33.8	33.6	33.6	33.3	33.3
6.5	35.8	35.8	35.7	35.7	35.8	35.6	35.7	35.6	35.7	35.5	35.4	35.5	35.4	35.6	35.6	35.4	35.4	35.3	35.2	35.2	35.2
6.0	37.1	37.0	37.1	37.1	37.1	36.8	36.8	36.7	36.8	36.7	36.9	36.8	36.6	36.7	36.7	36.5	36.7	36.2	36.2	36.1	36.1
AZ >>	130	131	132	133	134	135	136	137	138	139	140	141	142	143	144	145	146	147	148	149	150

Table 8. DSS 63 Western Horizon S-band T_{OP} with SPD Cone

ELEV																					
40.0	26.2	20.4	19.6	19.7	19.4	19.6	20.2	20.5	21.6	26.6	22.3	20.2	19.6	19.5	19.1	19.1	19.2	19.2	19.3	19.2	19.1
35.0	19.5	19.5	19.9	19.8	20.0	20.2	20.4	20.7	22.0	25.8	21.6	20.6	20.3	20.1	19.9	19.8	19.7	19.7	19.6	19.7	19.7
30.0	20.4	20.6	20.7	20.9	21.0	21.8	24.2	22.9	21.9	21.5	21.0	20.8	20.8	20.7	20.6	20.5	20.5	20.5	20.4	20.4	20.2
25.0	21.2	21.3	21.2	21.5	21.7	23.0	26.6	24.4	22.6	22.1	21.8	21.5	21.3	21.4	21.2	21.1	21.1	21.1	21.1	21.1	20.9
20.0	22.9	23.4	23.7	24.0	25.5	26.4	24.6	23.8	23.5	23.1	23.0	22.7	22.8	22.7	22.6	22.4	22.4	22.4	22.6	22.7	22.5
19.0	23.5	23.6	23.8	24.3	25.7	27.4	25.5	24.6	24.0	23.6	23.3	23.2	23.4	23.0	23.2	23.0	23.0	22.9	22.9	23.0	22.9
18.0	24.3	25.0	28.2	30.5	26.1	25.3	24.5	24.2	23.8	23.7	23.6	23.6	23.5	23.6	23.4	23.4	23.4	23.4	23.4	23.4	23.5
17.0	24.8	25.0	27.3	27.3	26.8	25.7	24.9	24.7	24.5	24.2	24.2	24.1	24.0	24.0	24.0	24.0	24.0	24.0	23.9	24.0	23.9
16.0	25.8	27.2	28.0	26.6	25.7	25.4	24.9	24.7	24.6	24.6	24.5	24.8	24.8	24.8	24.6	24.7	24.6	24.6	24.7	24.7	24.5
15.0	27.1	27.8	29.8	27.6	27.3	26.4	25.7	25.5	25.6	25.4	25.3	25.6	25.3	25.3	25.3	26.0	27.6	25.5	25.1	25.2	25.0
14.0	29.5	35.3	28.7	26.9	26.6	26.3	26.3	26.0	26.2	26.0	26.1	26.1	26.0	26.1	26.2	26.0	26.0	26.0	26.1	26.0	26.1
13.0	35.0	42.1	30.3	28.1	27.5	27.4	27.0	26.8	27.0	26.8	26.8	26.9	26.7	26.8	26.9	27.0	26.9	26.8	26.9	26.8	26.8
12.0	30.7	29.6	28.6	28.2	27.9	27.9	27.7	27.5	27.7	27.5	27.5	27.5	27.5	27.5	27.5	27.6	27.7	27.8	27.7	27.8	27.8
11.0	31.3	30.8	29.8	29.2	28.9	28.7	28.4	28.4	28.6	28.5	28.5	28.6	28.5	28.5	28.5	28.4	28.4	28.7	28.6	28.6	28.6
10.0	29.8	29.9	29.8	29.6	29.5	29.4	29.3	29.4	29.3	29.4	29.5	29.4	29.3	29.7	29.5	29.5	29.4	29.5	29.5	29.7	29.7
9.5	30.6	30.4	30.2	30.3	30.1	30.1	30.1	30.1	30.2	30.1	30.3	30.3	30.0	30.0	30.6	30.3	30.1	30.3	30.4	30.2	30.2
9.0	30.9	30.9	30.8	30.7	30.9	30.6	30.8	30.7	30.8	30.7	31.1	30.8	30.7	30.7	30.9	30.8	30.9	30.7	31.1	30.8	31.0
8.5	31.5	31.5	31.4	31.6	31.7	31.5	31.4	31.5	31.4	31.4	31.3	31.3	31.2	31.2	31.3	31.3	31.2	31.4	31.3	31.3	31.3
8.0	32.3	32.1	31.9	32.3	32.1	32.1	32.2	31.9	32.4	32.2	32.3	32.2	32.4	32.3	32.0	32.2	32.4	32.4	32.4	32.5	32.5
7.5	33.1	33.2	32.9	33.5	33.0	33.0	33.3	33.0	32.9	33.4	33.2	33.3	33.2	33.1	33.4	33.5	33.2	33.3	33.2	33.2	33.5
7.0	33.9	34.5	33.8	34.3	34.3	34.1	34.0	34.0	34.3	34.3	34.6	34.3	34.3	34.5	34.7	34.8	34.6	34.7	34.7	34.5	34.5
6.5	34.4	34.2	34.7	34.8	34.7	34.8	34.4	34.5	34.4	34.8	34.5	34.9	34.8	34.7	35.0	35.2	35.2	35.3	35.2	35.2	35.4
6.0	35.4	35.3	35.7	36.2	35.5	35.9	35.8	35.8	36.1	36.6	36.7	36.3	36.8	36.9	36.9	37.0	37.1	36.9	37.2	37.3	37.1
AZ >>	210	211	212	213	214	215	216	217	218	219	220	221	222	223	224	225	226	227	228	229	230
ELEV																					
40.0	19.1	19.0	18.9	18.9	18.9	18.8	18.8	18.8	18.9	18.8	18.8	18.9	18.9	18.9	18.9	18.9	18.9	18.9	18.9	18.9	19.0
35.0	19.7	19.5	19.6	19.4	19.3	19.5	19.4	19.3	19.5	19.4	19.2	19.2	19.4	19.4	19.2	19.1	19.2	19.3	19.4	19.2	19.2
30.0	20.2	20.3	20.2	20.2	20.3	20.2	20.2	20.1	20.1	20.0	20.1	20.0	19.9	20.0	20.0	20.1	20.1	20.0	20.2	20.2	20.2
25.0	20.9	20.9	21.2	21.1	20.8	20.9	20.9	20.9	20.9	20.9	21.0	21.0	21.0	21.0	21.1	21.1	21.1	21.1	21.1	21.1	21.0
20.0	22.5	22.6	22.7	22.5	22.6	22.6	22.5	22.9	22.7	22.7	22.6	22.5	22.5	22.5	22.6	22.6	22.6	22.6	22.6	22.7	22.8
19.0	22.9	23.0	23.0	23.0	23.0	23.0	23.0	23.0	23.0	23.2	23.1	23.2	23.2	23.1	23.1	23.1	23.1	23.1	23.2	23.2	23.2
18.0	23.5	23.5	23.5	23.5	23.6	23.6	23.7	23.7	23.7	23.8	23.8	23.9	23.8	23.7	23.7	23.7	23.7	23.7	23.8	23.8	23.8
17.0	23.9	23.9	24.1	24.1	24.1	24.1	24.1	24.1	24.3	24.3	24.3	24.3	24.2	24.2	24.2	24.2	24.2	24.2	24.2	24.3	24.3
16.0	24.5	24.6	24.7	24.7	24.7	24.8	24.8	24.8	24.8	24.9	24.7	24.7	24.6	24.6	24.7	24.8	24.9	24.8	24.9	24.9	24.9
15.0	25.0	25.2	25.2	25.2	25.1	25.3	25.2	25.3	25.3	25.3	25.6	25.4	25.5	25.5	25.5	25.6	25.6	25.6	25.5	25.7	25.6
14.0	26.1	26.0	26.1	26.1	26.2	26.2	26.2	26.3	26.2	26.3	26.4	26.3	26.3	26.3	26.4	26.4	26.4	26.5	26.6	26.5	26.6
13.0	26.8	26.9	26.8	26.8	26.8	26.9	26.9	26.9	26.9	27.0	27.0	27.0	27.1	27.1	27.1	27.1	27.1	27.1	27.2	27.2	27.3
12.0	27.8	27.6	27.7	27.7	27.8	27.8	27.8	27.8	27.9	28.0	27.9	27.9	27.9	27.9	28.0	28.0	28.0	28.1	28.1	28.2	28.2
11.0	28.6	28.6	28.5	28.5	28.6	28.5	28.6	28.8	28.7	28.7	28.9	28.8	28.8	28.8	28.8	28.9	28.9	28.9	28.9	29.0	29.0
10.0	29.7	29.5	29.5	29.5	29.6	29.6	29.6	29.7	29.8	29.9	29.8	29.8	29.9	29.9	30.0	30.0	30.0	30.0	30.1	30.1	30.1
9.5	30.2	30.4	30.3	30.3	30.3	30.3	30.2	30.5	30.4	30.4	30.6	30.5	30.6	30.6	30.6	30.7	30.8	30.7	30.6	30.7	30.7
9.0	31.0	30.8	31.0	30.9	31.1	31.0	31.0	31.1	31.1	31.3	31.2	31.3	31.4	31.3	31.4	31.4	31.4	31.4	31.4	31.5	31.6
8.5	31.3	31.3	31.5	31.5	31.4	31.5	31.6	31.7	31.6	31.8	31.8	32.0	31.8	31.9	32.1	32.0	32.2	32.2	32.3	32.3	32.4
8.0	32.5	32.4	32.5	32.4	32.3	32.5	32.7	32.7	32.8	32.9	32.8	32.9	32.9	33.0	32.9	33.0	33.1	33.2	33.3	33.3	33.5
7.5	33.5	33.3	33.1	33.3	33.4	33.5	33.6	33.6	33.8	33.9	34.0	33.9	34.1	34.3	34.2	34.7	34.5	34.6	34.5	34.6	34.7
7.0	34.5	34.6	34.5	34.5	34.5	34.7	34.5	34.6	34.7	34.9	35.1	35.4	35.4	35.5	35.6	35.8	36.1	36.3	36.5	36.4	36.5
6.5	35.4	35.4	35.4	35.7	36.0	35.9	36.0	35.8	35.3	35.7	35.8	36.2	36.5	36.8	37.2	37.9	39.0	42.3	45.9	44.5	39.2
6.0	37.1	37.2	37.1	37.0	37.3	37.3	37.2	37.5	37.5	37.9	38.4	39.2	41.6	47.5	49.4	57.4	89.6	113	122	118	105
AZ >>	230	231	232	233	234	235	236	237	238	239	240	241	242	243	244	245	246	247	248	249	250

Table 9. Gain Reduction Due to Wind Loading, 70-m Antenna

Wind Speed		S-band Gain Reduction, dB*	X-band Gain Reduction, dB*
km/hr	mph		
32	20	Negligible	0.1
48	30	Negligible	0.3
72	45	0.15	1.5

** Assumes antenna is maintained on point, using CONSCAN or an equivalent. Worst case, with most adverse wind-antenna orientation.*

Table 10. Recommended Minimum Operating Carrier Signal Levels

Reference Channel Noise Bandwidth ($2B_{LO}$)	Minimum Carrier Signal Level, dBm[a]					
	1 Hz	3 Hz	10 Hz	30 Hz	100 Hz	300 Hz
L-band LNA-1 or 2	[b]	-168.4	-163.2	-158.4	-153.2	-148.4
S-band Ultracone, DSS43	[b]	-173.2	-167.9	-163.2	-157.9	-153.2
S-band LNA-1[c]						
diplexed	[b]	-170.8	-165.6	-160.8	-155.6	-150.8
listen-only		-171.9	-166.6	-161.9	-156.6	-151.9
S-band LNA-2[c]						
diplexed	[b]	-169.8	-164.6	-159.8	-154.6	-149.8
listen-only	[b]	-170.6	-165.4	-160.6	-155.4	-150.6
X-band LNA-1 and 2						
DSS 14	N/A	[b]	-165.5	-160.7	-155.5	-150.7
DSS 43 and 63	N/A	[b]	-165.4	-160.6	-155.4	-150.6

[a] Levels are 10 dB above RF loop design threshold, with nominal system noise temperature and nominal loop bandwidths assumed, referenced to TWM or LNA input terminals. A bandwidth given as, e.g., "10 Hz" actually means 5 Hz each side of carrier frequency, and so forth.

[b] Use of this bandwidth is not recommended due to phase jitter introduced into the loop bandwidth by the local oscillator (see module TRK-20).

[c] S-band levels are calculated using the average of the noise temperature values given in Table 2.

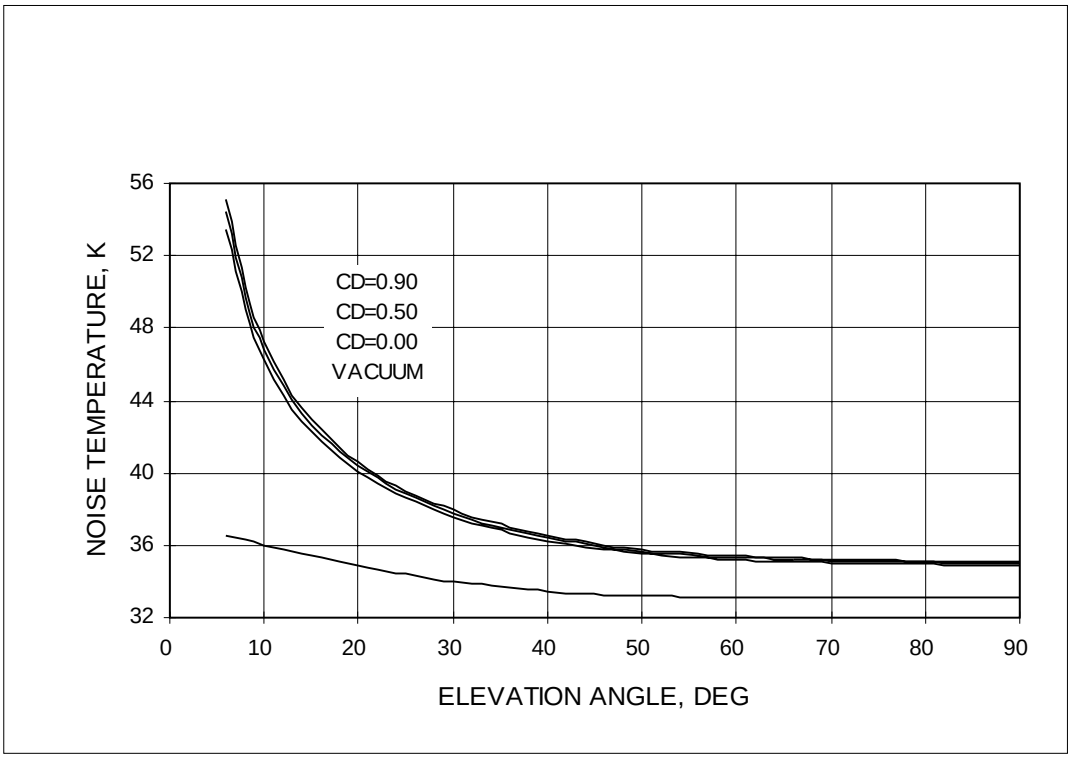

Figure 1. L-band System Noise Temperature, All Stations

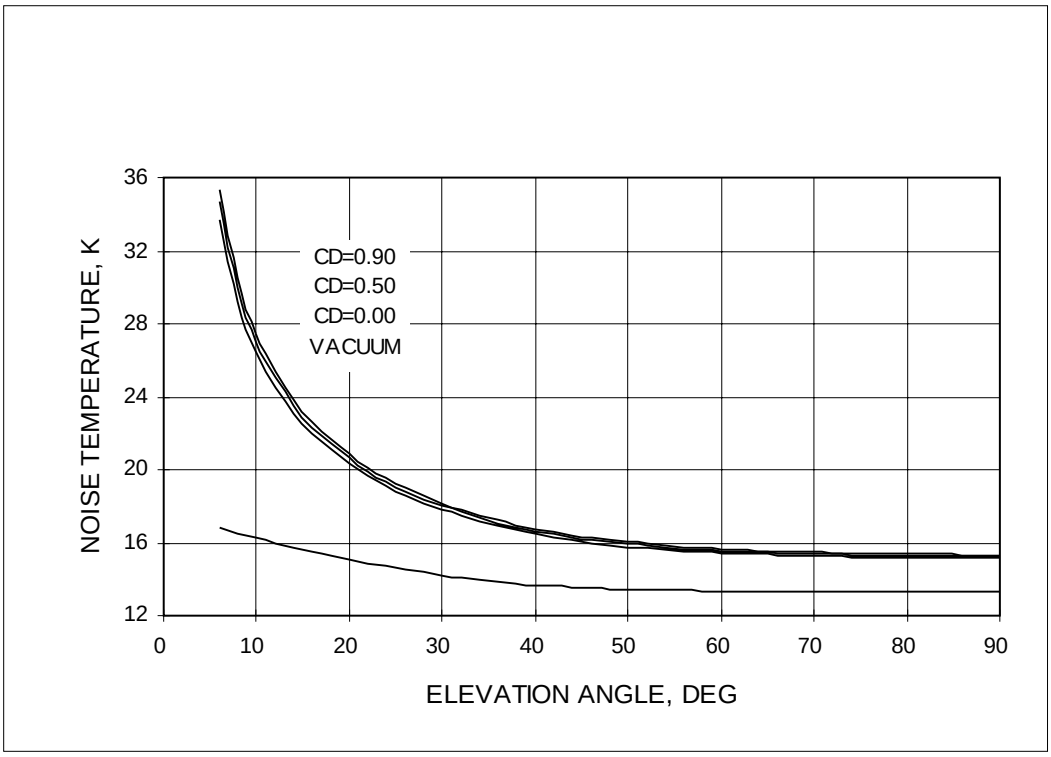

Figure 2. S-band System Noise Temperature vs. Elevation Angle, DSS-14, LNA-1, Nondiplexed (See Appendix A for DSS 43 and 63)

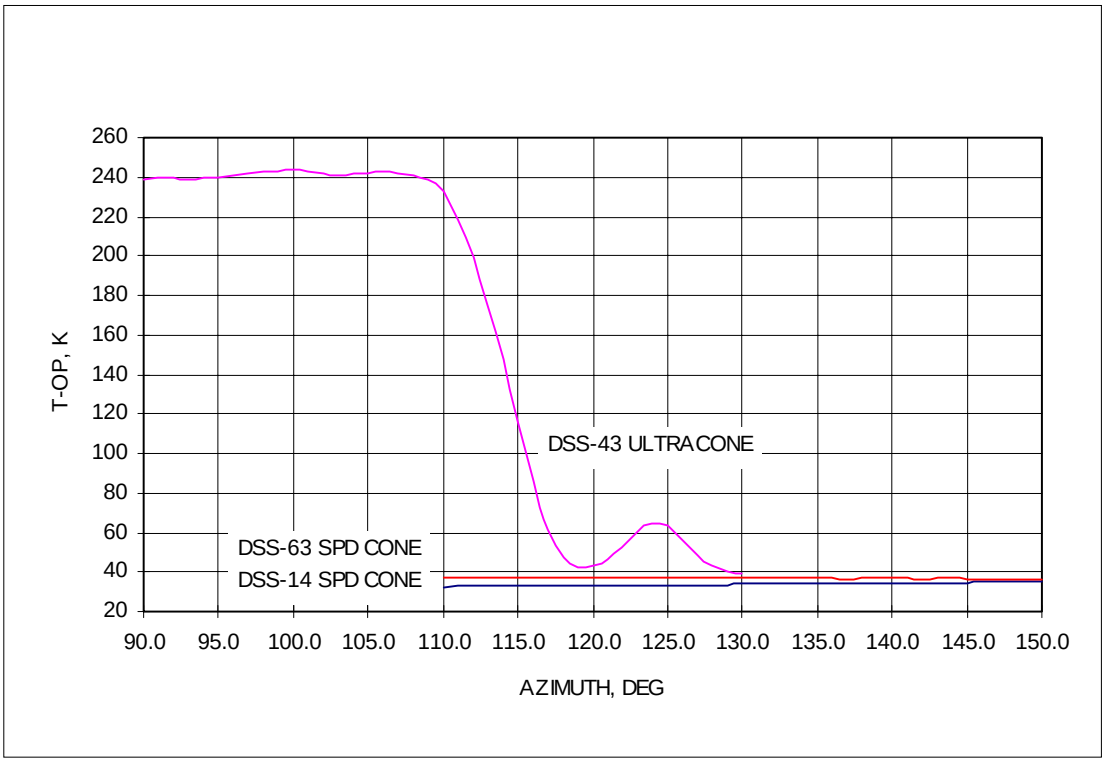

Figure 3. Eastern Horizon S-band System Noise Temperature at 6° Elevation Angle

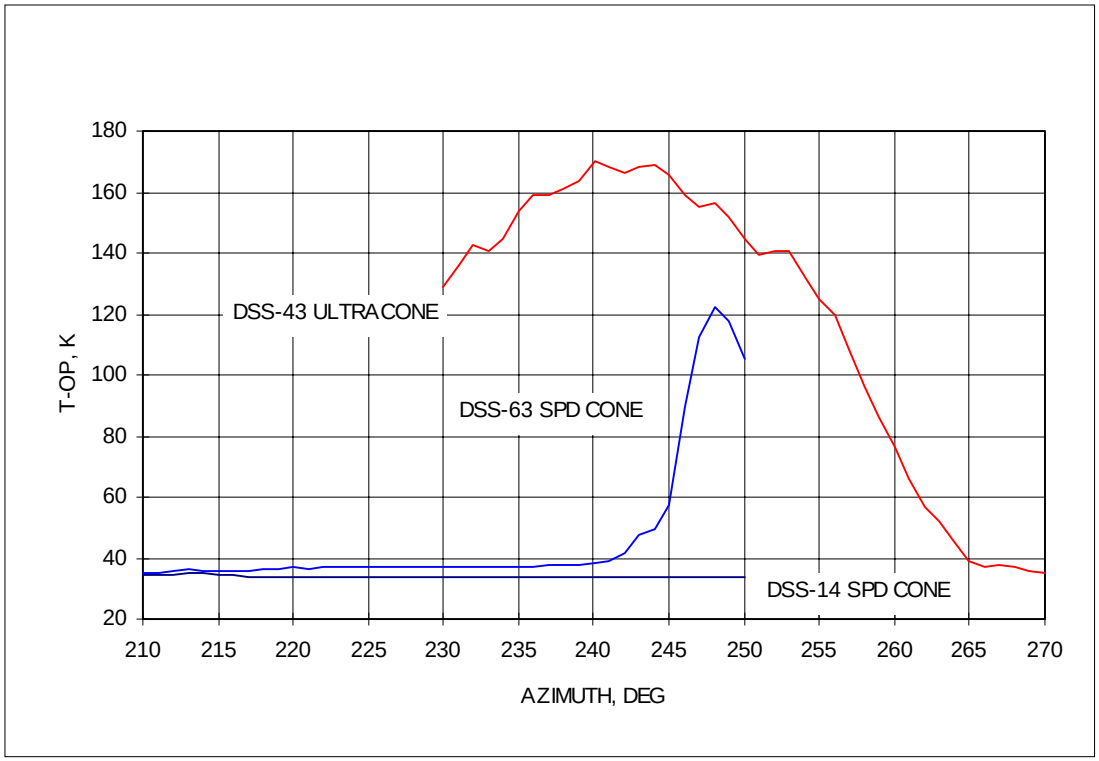

Figure 4. Western Horizon S-band System Noise Temperature at 6° Elevation Angle

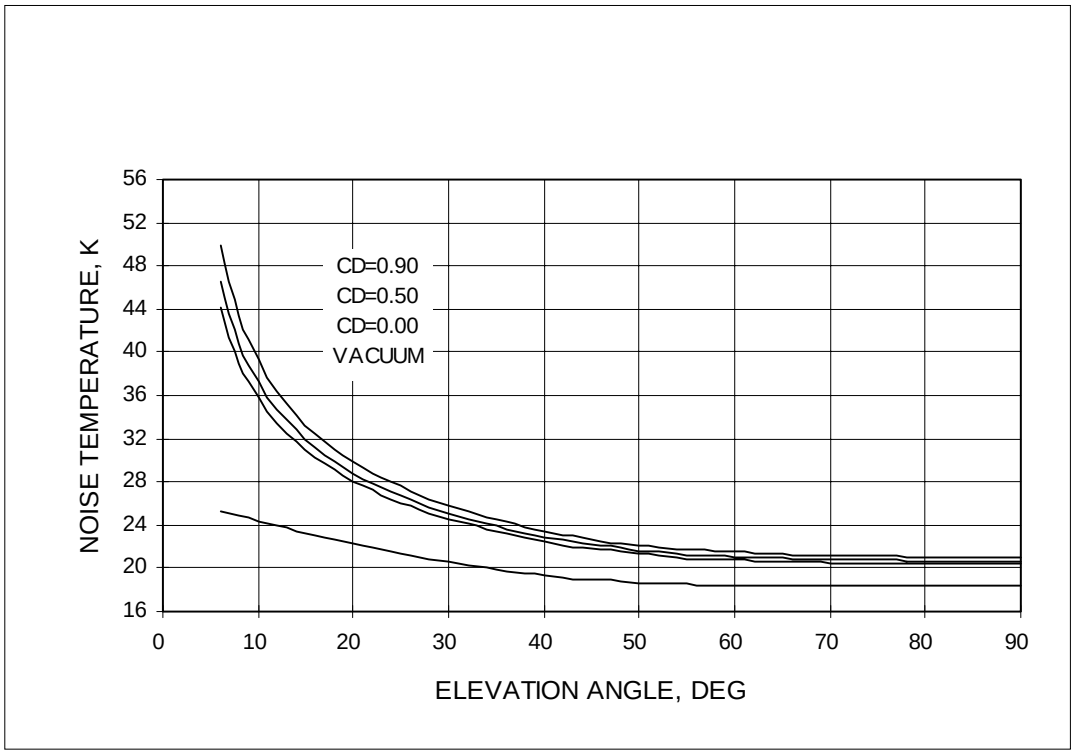

Figure 5. X-band System Noise Temperature vs. Elevation Angle, DSS 14

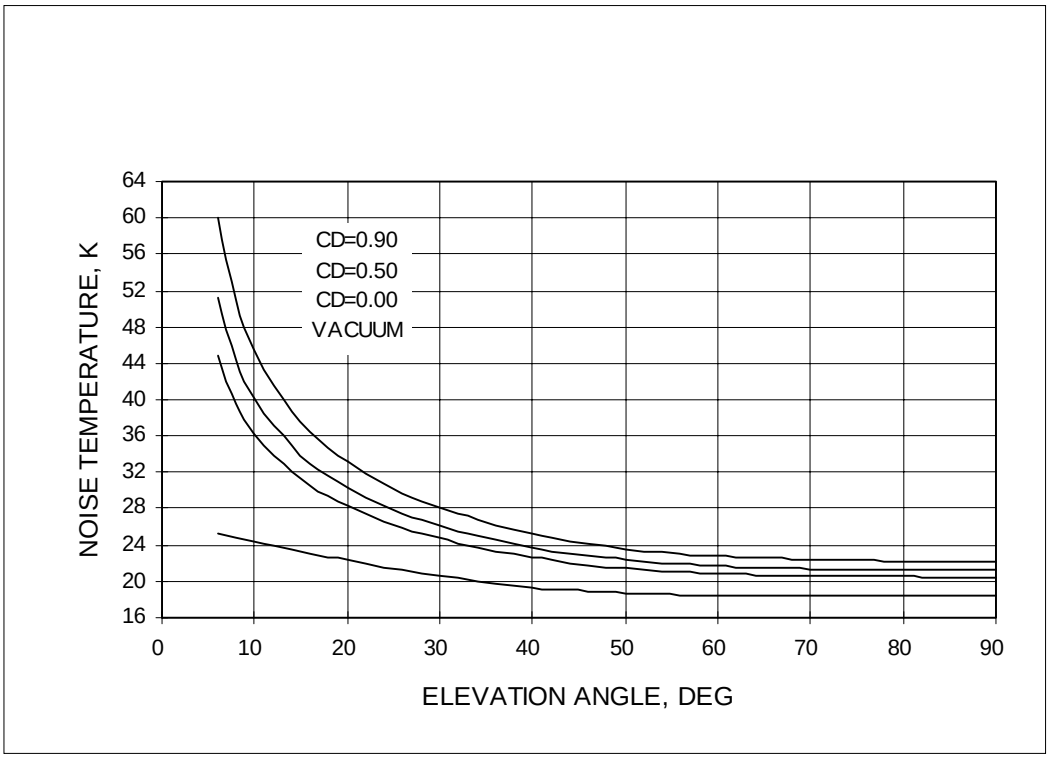

Figure 6. X-band System Noise Temperature vs. Elevation Angle, DSS 43 and DSS 63

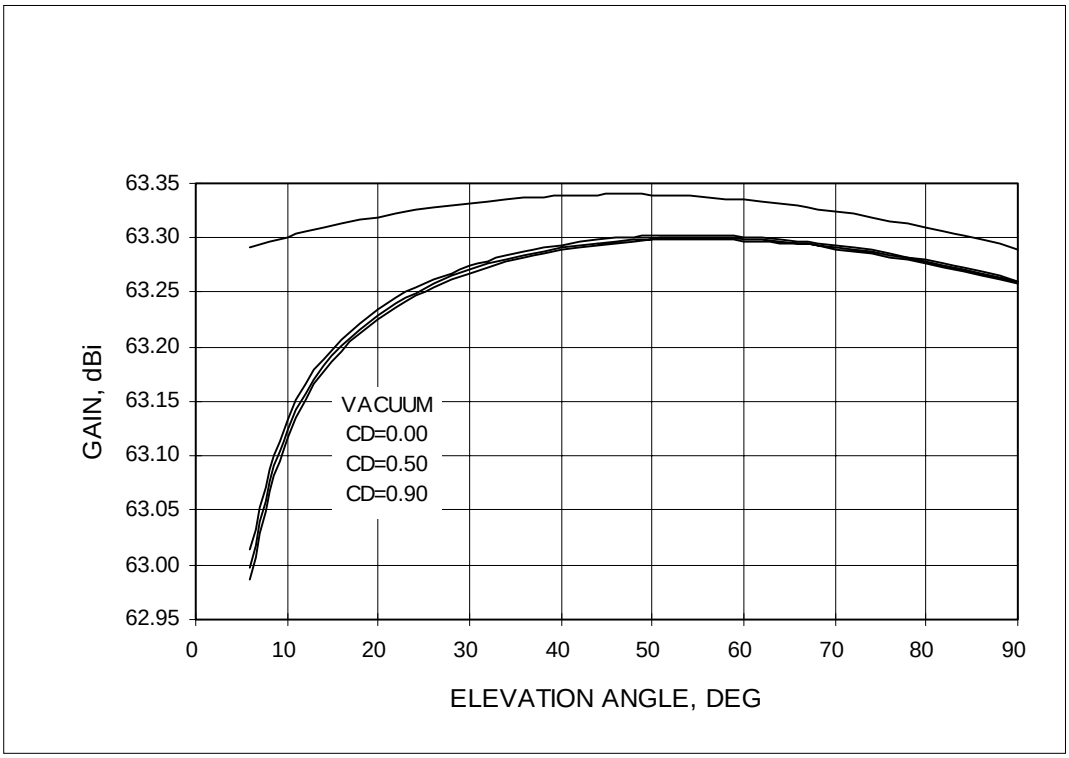

Figure 7. S-band Gain vs. Elevation Angle, All Stations

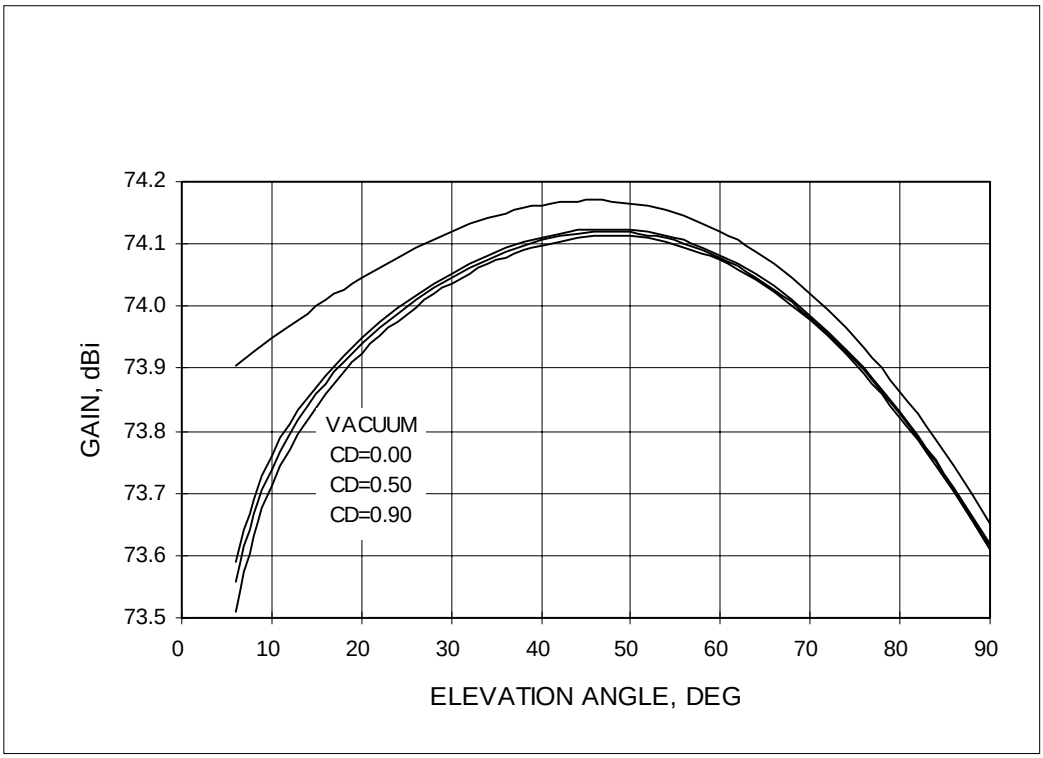

Figure 8. X-band Gain vs. Elevation Angle, DSS 14

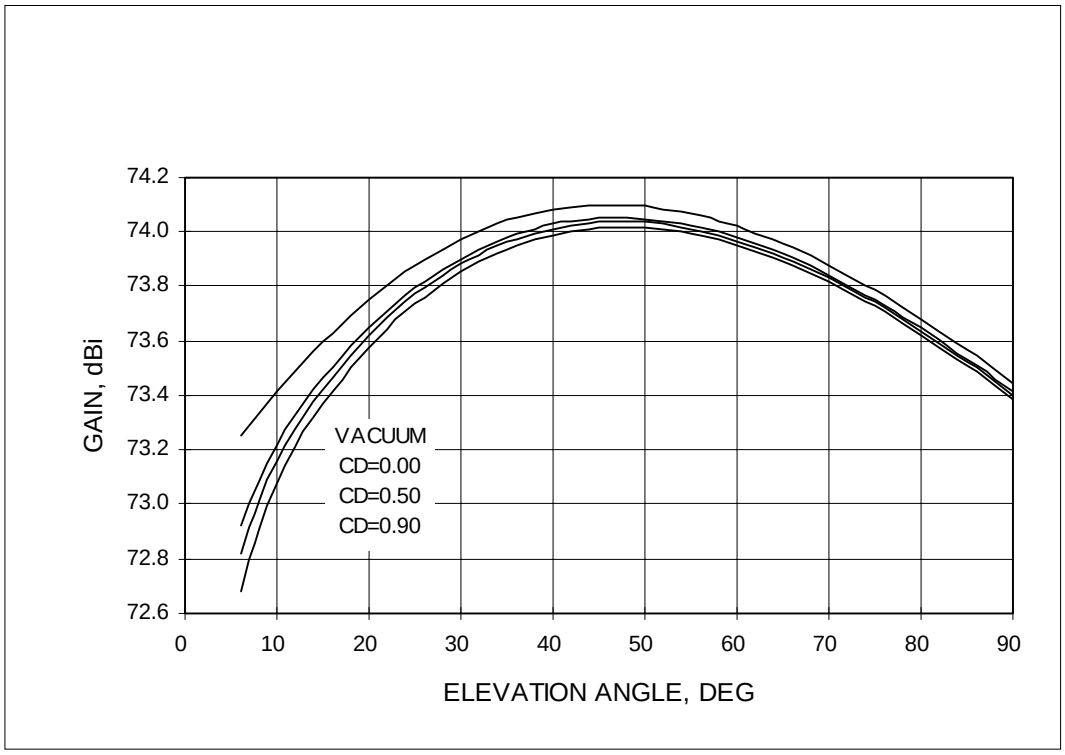

Figure 9. X-band Gain vs. Elevation Angle, DSS 43

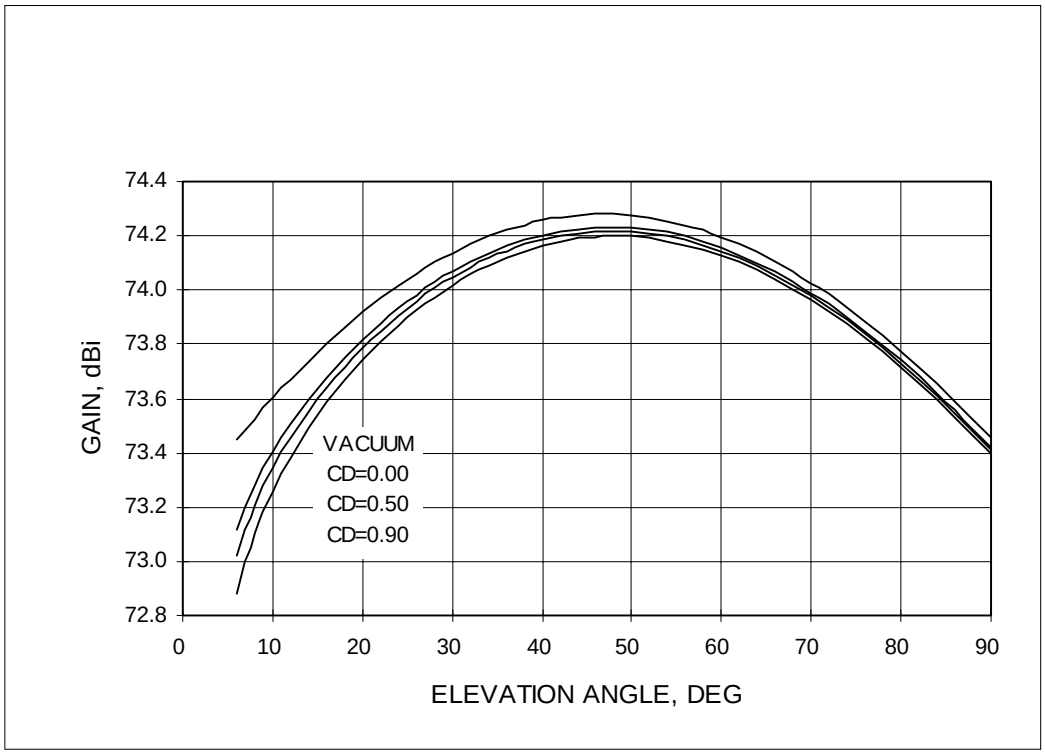

Figure 10. X-band Gain vs. Elevation Angle, DSS 63

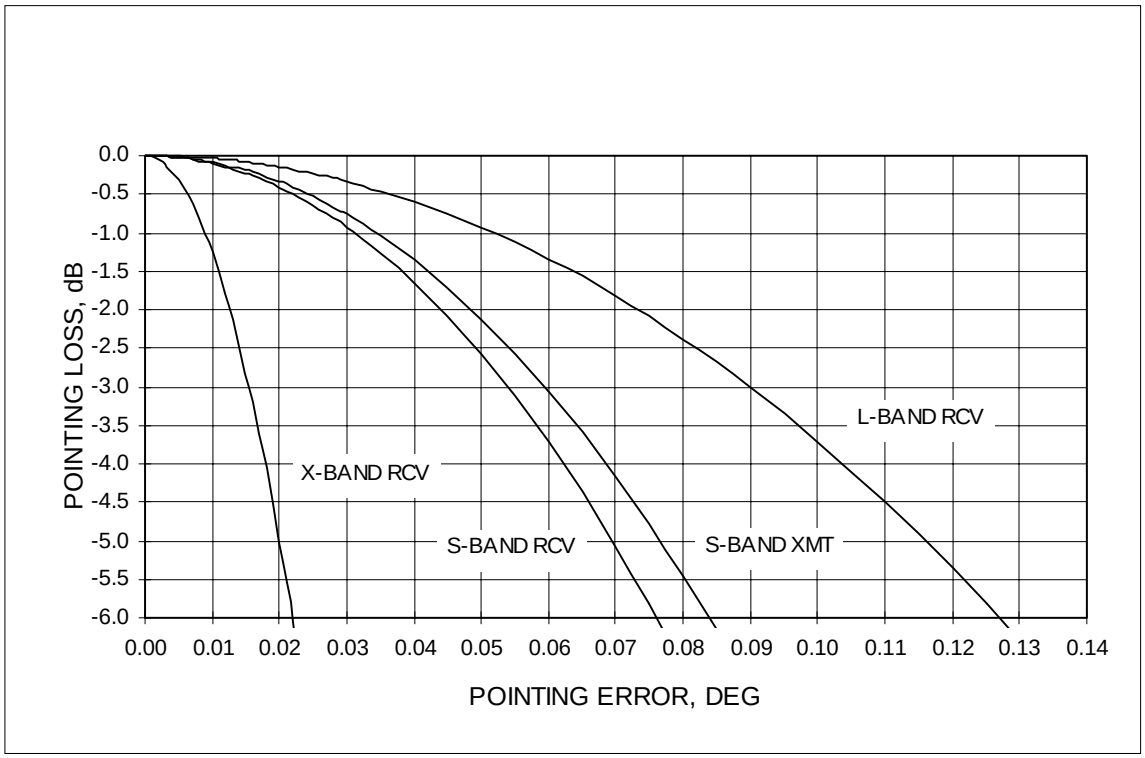

Figure 11. Antenna Pointing Loss vs Pointing Error

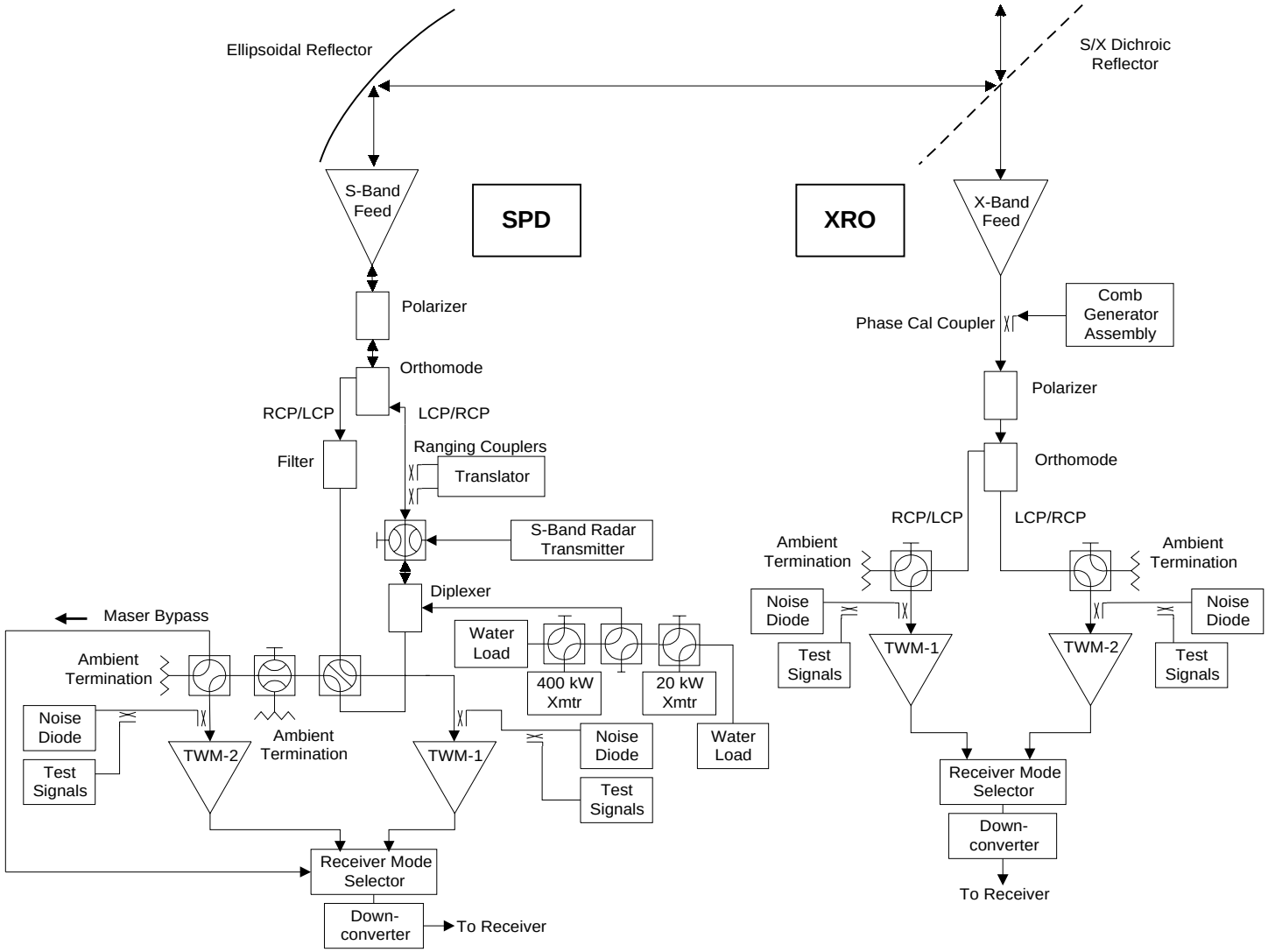

Figure 12. Functional Block Diagram of Microwave and Transmitter Subsystems

Appendix A
Equations for Curves in Figures 1–2 and 5–11

Figure 1	L-band System Temperature vs. Elevation Angle
Figure 2	S-band System Temperature vs. Elevation Angle
Figures 5–6	X-band System Temperature vs. Elevation Angle.
Note:	Equations valid for elevation angle $\theta \geq 6°$

$$T_{OP}(\theta) = T_1 + T_2 \exp[-a/(90 - \theta)] + T_Z/[\sin\theta]^B \qquad K$$

where $B = 1 - 0.27A_Z$ and A_Z is given on page 29

Parameter	Vacuum Component of System Noise Temperature*					
	L-band	S-band				X-band
	All Stations	DSS 14 SPD Cone	DSS 43 Ultracone	DSS 43 SPD Cone	DSS 63 SPD Cone	All Stations
T_1 (K)	33.11	13.35	9.78	13.75	15.05	18.39
T_2 (K)	101.95	101.95	101.95	101.95	101.95	122.43
a (deg)	285.00	285.00	285.00	285.00	285.00	241.50

** Note: See Tables 3–8 for system noise temperatures at low elevation angles.*

T_Z (zenith atmosphere noise above vacuum) is given by:

Weather Condition	Atmospheric Noise Temperature, K		
	L- and S-band	X-band	
	All Stations (Figs. 1 and 2)	DSS 14 (Fig. 5)	DSS 43 and 63 (Fig. 6)
Vacuum	0.000	0.000	0.000
0%	1.798	2.006	2.097
25%	1.848	2.170	2.534
50%	1.903	2.276	2.794
80%	1.965	2.458	3.273
90%	1.984	2.633	3.775

Figure 7 S-band Gain vs. Elevation Angle

Figures 8–10 X-band Gain vs. Elevation Angle

Note: Equation valid for elevation angle $\theta \geq 6°$

$$G(\theta) = G_0 - G_1 (\cos\gamma - \cos\theta)^2 - G_2 (\sin\gamma - \sin\theta)^2 - A_Z/\sin\theta \qquad \text{dBi}$$

Parameter	Vacuum Component of Gain				
	L-band	S-band	X-band		
	All Stations	All Stations	DSS 14	DSS 43	DSS 63
G_0 (dBi)	60.17	63.34	74.17	74.10	74.28
G_1 (dBi)	0.088	0.088	0.990	1.047	1.490
G_2 (dBi)	0.104	0.104	0.473	1.979	1.766
γ (deg)	46.27	46.27	45.78	46.21	46.83

A_z (zenith atmosphere attenuation above vacuum) is given by:

Weather Condition	Atmospheric Attenuation, dB			
	L- and S-band	X-band		
	All Stations (Fig. 7)	DSS 14 (Fig. 8)	DSS 43 (Fig. 9)	DSS 63 (Fig. 10)
Vacuum	0.0000	0.0000	0.0000	
0%	0.0290	0.0330	0.0345	
25%	0.0298	0.0352	0.0411	
50%	0.0307	0.0364	0.0448	
80%	0.0317	0.0387	0.0516	
90%	0.0320	0.0413	0.0593	

Figure 11 S-band Transmit Gain Reduction (dB) vs. Angle off Boresight (θ, deg)

$$\Delta G = 10 \log [\exp(-195.8\ \theta^2)]$$

L-band Receive Gain Reduction (dB) vs. Angle off Boresight (θ, deg)

$$\Delta G = 10 \log [\exp(-85.57\ \theta^2)]$$

S-band Receive Gain Reduction (dB) vs. Angle off Boresight (θ, deg)

$$\Delta G = 10 \log [\exp(-237.7\ \theta^2)]$$

X-band Receive Gain Reduction (dB) vs. Angle off Boresight (θ, deg)

$$\Delta G = 10 \log [\exp(-2885\ \theta^2)]$$

TRK-30, Rev. E
DSN Tracking System, Ranging

January 15, 1997

Prepared by:

A. Kwok
TRK System CDE

Approved by:

K. M. Liewer
TRK System Engineer

Released by:

G. E. Shultz
DSN Document Release

Change Log

Change Number	Date	Affected Pages
Initial Issue	12/1/96	All
Change 1	1/15/97	8, 24

The DSN currently has both analog and digital closed-loop receivers. For an analog receiver (MFR, Block-III or Block-IV), two coaxial cables are used to pass a 10-MHz I.F. and a 5-MHz Doppler reference to each of the two SRA channels. (The SRA has two channels. Channel 1 is normally used to process S-band data and channel 2 is used to process X-band Data.) The 10-MHz I.F. contains ranging tones which are demodulated and correlated in the SRA. The 5-MHz reference is used for Doppler rate aiding during range measurements.

In the Block-V receiver (BVR) implementation, demodulation of the ranging code is done within the BVR. The two ranging basebands (normally one for S-band and one for X-band) are sent to the SRA as digital data through an optical fiber interface. In addition, the BVR provides two analog signals, the Doppler clock and the bias frequency, through coaxial cables to the SRA. The Doppler clock is sometimes referred to as the 1 MHz signal and the bias frequency is sometimes referred to as the 65 MHz signal.

The Doppler clock, F_{DC}, is computed from the received frequency as follows:

$$F_{DC} = \frac{S_e}{K} \cdot f_r - f_b$$

where:

f_r = received carrier frequency

K = spacecraft turn around ratio:

240/221 for S-up/S-down

880/221 for S-up/X-down

240/749 for X-up/S-down

880/749 for X-up/X-down

S_e = 1/32 for S-up

11/1200 for X-up using 34-m HEF X-band exciter

221/(749 x 32) for X-up using Block-V exciter (BVE)

f_b = bias frequency given by:

$$f_b = \frac{160}{256} \cdot \text{trunc}\left[\frac{256}{160} \cdot \left(0.5 + \frac{S_e}{K} - 1.0\right)\right], \quad \text{(MHz)}$$

in which trunc[*] is the truncation function.

This bias frequency only has six possible values: 62.5 MHz, 63.125 MHz, 63.75 MHz, 64.375 MHz, 65.0 MHz, and 65.625 MHz.

2.2 Parameters Specified for Ranging Operations

This following paragraphs present the parameters that are required in ranging operations.

2.2.1 Transmit Time and Receive Time

The SRA needs a transmit time (XMIT) and a receive time (T_O) so that the code sequence can be sent and received for measuring the phase shifted through round-trip-time delay. When a XMIT and an approximate RTLT are specified, the SRA automatically calculates the receive time T_O by adding the two given quantities: T_O = XMIT + RTLT. This T_O is also called the start time of the correlation process for the code sequence. These time quantities are specified and evaluated in integer seconds.

2.2.2 Clocks and Components

A range measurement begins with the highest frequency code followed by subsequent codes each having a frequency exactly half of the previous one. The first code in the sequence is called the clock component and determines the resolution of the measurement. The lower frequency codes that follow are used to resolve the ambiguity (uncertainty) of the a priori range estimate.

Table 1 shows the clocks and components used in ranging operations. A total of 22 code components are available. They are component numbers 3 through 24 as shown in the Table. The first 8 components (numbered 3 through 10) are called the clock components or simply clocks. The approximate ambiguity resolving capability of a component is listed in the Table for reference. The approximate frequencies and periods of the codes are also shown.

The frequency (F_C) in the second column is computed by the relationship:

$$F_C = \frac{F66}{2^{2+n}}$$

where:

n is an integer from 3 to 24 which represents a code component or a component number.

The value of F66 used to produce Table 1 is 66 MHz. In ranging operations, this frequency varies depending upon the transmitting (uplink) carrier frequency. F66 is denoted by F66s, F66x, or F66xv for a reference frequency derived from a S-band, X-band Block III, or X-band Block-V exciter respectively. It can be expressed in terms of the uplink frequency as follows:

S-band uplink:

$$F66s = \frac{1}{32} \times Fts$$

Table 1. Range Code Resolving Capability

Component Number	Approximate Frequency (Hertz)	Approximate Period (Seconds)	Approximate Ambiguity Resolving Capability (km)
3*	2.06E+06	4.85E-07	7.27E-02
4*	1.03E+06	9.70E-07	1.45E-01
5*	5.16E+05	1.94E-06	2.91E-01
6*	2.58E+05	3.88E-06	5.81E-01
7*	1.29E+05	7.76E-06	1.16E+00
8*	6.45E+04	1.55E-05	2.33E+00
9*	3.22E+04	3.10E-05	4.65E+00
10*	1.61E+04	6.21E-05	9.30E+00
11	8.06E+03	1.24E-04	1.86E+01
12	4.03E+03	2.48E-04	3.72E+01
13	2.01E+03	4.96E-04	7.44E+01
14	1.01E+03	9.93E-04	1.49E+02
15	5.04E+02	1.99E-03	2.98E+02
16	2.52E+02	3.97E-03	5.95E+02
17	1.26E+02	7.94E-03	1.19E+03
18	6.29E+01	1.59E-02	2.38E+03
19	3.15E+01	3.18E-02	4.76E+03
20	1.57E+01	6.36E-02	9.53E+03
21	7.87E+00	1.27E-01	1.91E+04
22	3.93E+00	2.54E-01	3.81E+04
23	1.97E+00	5.08E-01	7.62E+04
24	9.83E-01	1.02E+00	1.52E+05
* These are the 8 available clocks			

X-band uplink using the Block-III exciter:

$$F66x = \frac{11}{1200} \times Ftx$$

X-band uplink using the Block-V exciter:

$$F66xv = \frac{221}{749 \times 32} \times Ftx$$

where, Fts and Ftx are the S- and X-band transmitting (uplink) frequencies.

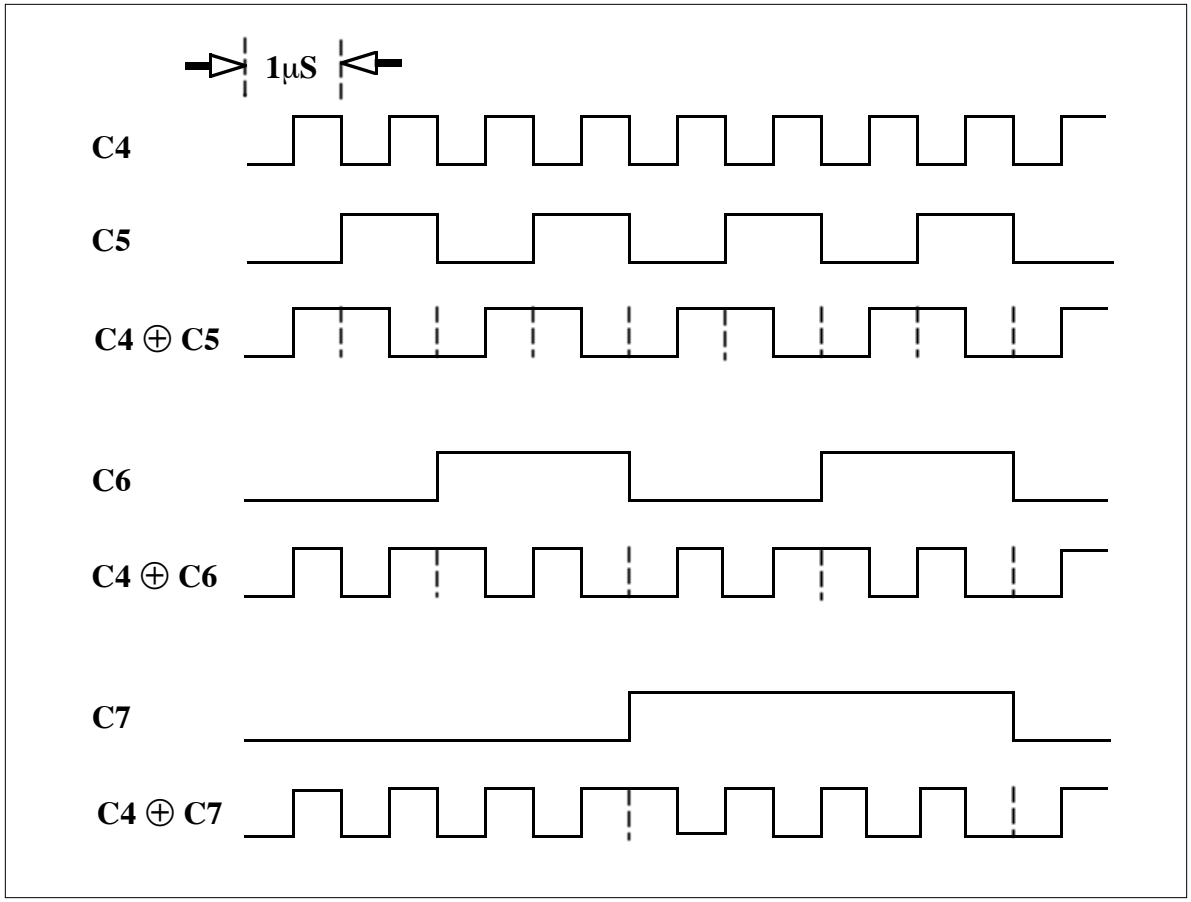

Figure 16. Chopping of C5, C6, and C7 (by C4)

2.2.7 Other Parameters

There are four other parameters which must also be specified for ranging operations. Their meaning and usage are briefly summarized below.

2.2.7.1 Tolerance. Tolerance is used to set the acceptable limit of a given Figure of Merit (FOM). Tolerance may be selected over the range of 0.0% to 100.0%. On one hand, if tolerance is set to 0.0%, all range acquisitions will be declared valid. On the other, if it is set to 100.0%, all range acquisitions will be declared invalid.

A typical value set for tolerance is 99.9%. This value will flag acquisitions which have a 99.9% or better chance of being good as valid, and the rest as invalid.

The FOM (See Paragraph 2.3.3 for additional discussion) is an estimate of the goodness of an acquisition, based on the P_r/N_o measurement made from integrating the clock. An acquisition is declared valid or invalid depending upon the following criteria:

FOM ≥ Tol	=>	Valid
FOM < Tol	=>	Invalid

2.2.7.2 ***Servo.*** When Servo is enabled, the local Doppler-corrected components will be shifted back into phase with the received components. Servo is used to correct distortions of the data due to charged particle effect using DRVID information (See Paragraph 2.3.4 for a discussion of DRVID). The correction is made by setting a proper Servo value.

Servo has a value between 0 and 1.0. It should be set to 1.0 with a noiseless signal, but if the noise level is too high, no DRVID refinement is possible then Servo should be set to 0. Note that if Servo is 1.0, the correction is made immediately; however, if Servo is set to a fractional value between 0 and 1.0, that fraction of the correction will be done on any one DRVID measurement.

2.2.7.3 ***Inversion***. The inversion parameter is used to invert the received ranging signal depending on the receiving system of a DSS. All receivers in the DSN, with the exception of the receivers in the 34-m STD subnet, invert the ranging signal. Note that spacecraft may also invert the ranging signal, however, none currently in operation do.

2.2.7.4 ***Pipe***. The "Pipe" parameter (for pipelining) specifies the number of range acquisitions to be made. This parameter enables multiple measurements to be initiated before the first measurement is completed. Only one acquisition is made if Pipe is disabled. If it is enabled, range measurements will be made until the total number of acquisitions reaches 32767 or until the specified number of acquisitions. In other words, the number of range acquisitions that can be performed is between 1 and 32767.

2.3 Measurement Process

The SRA transmitter coder uses a reference frequency (denoted by F66 in this Document) to generate a sequence of square waves (or binary codes). This code sequence is phase-modulated onto the uplink carrier. The measurement process begins when this signal is received by the SRA one RTLT later.

Prior to the receive time, T_o, the SRA receiver coder, referenced to the same F66, produces a replica of the uplink sequence. The two coders are synchronized so that they operate at the same frequency and phase.

At T_o, the synchronization is ended and a Doppler reference is used to advance or retard the phase of the replica (the Doppler modification essentially freezes the range at T_o when the synchronization ended). This Doppler-modified replica is sampled into an in-phase component (I_c) and a quadrature component (Q_c). These two components are correlated with the demodulated receiving code to produce the correlation values V_I and V_Q. The V_I's and V_Q's are used to compute the angle and amplitude of the received code; hence, the phase and signal strength are determined. The following paragraphs provide further detail.

The measurement of the phase (angle) displacement of the clock provides the resolving capability of the range measurement (See Table 1). Once the phase displacement is

CMD-10, Rev. C
DSN Command System

January 15, 1997

Prepared by:

R. W. Sniffin
CMD Cognizant Development Engineer

Approved by:

M. J. Stoloff
CMD System Engineer

Released by:

DSN Document Release

Change Log

Change Number	Date	Affected Pages
Initial Issue	1/15/97	All

Contents

Section **Page**

1. Introduction 4
1.1 Purpose 4
1.2 Scope 4

2. General Information 4
2.1 Power Output 5
2.1.1 Earth Orbiter S-band 5
2.1.2 Deep Space S-band 5
2.1.3 Deep Space X-band 6
2.2 Modulation Modes 6
2.3 Subcarrier Frequencies 6
2.3.1 PSK Subcarrier Frequencies 6
2.3.2 FSK Subcarrier Frequencies 6
2.3.3 Stability 6
2.4 Data Rates 7
2.4.1 PSK Data Rates 7
2.4.2 FSK Data Rates 7
2.4.3 Data Rate Stability 7
2.5 Subcarrier to Data Rate Ratios 7
2.6 Clock Modulation and Summing 7
2.6.1 Amplitude Modulation 7
2.6.2 Clock Summing 8
2.7 Frequency Modulation 9
2.8 Modulation Index 9
2.8.1 Range 9
2.8.2 Accuracy and Resolution 9
2.8.3 Modulation Index Stability 10
2.9 Modulation Losses 10
2.10 Deep Space Store-and-Forward Command Protocol 10
2.10.1 Command Data Handling 10
2.10.2 Execution of Timed Commands 11
2.11 Earth-Orbiter Throughput Command 11
2.12 Emergency Support 12
2.13 Command Data Error Rate 12
2.14 Command Mode 12
2.15 Idle Sequences 13
2.16 Space Shuttle Commanding 13

Illustrations

Figure **Page**

1 Amplitude Modulation of Subcarrier by Clock Frequency 8
2 Summing of Subcarrier and Clock Frequency 8
3 Command Subsystem Modes 14

Tables

Table **Page**

1 Waveform and Transmit Capabilities 13

1. Introduction

1.1 Purpose

This module describes the capabilities of the DSN Command System (CMD) as installed at the Deep Space Communications Complexes (DSCCs). It is intended to provide sufficient information to enable telecommunications engineers to predict command system performance when using the DSN Command System.

1.2 Scope

This module provides the performance parameters of the DSN Command system used with all DSN subnets. This module does not provide the capabilities of elements of the DSN Command system which are common to other systems. Information on common elements can be found in module TCI-10 for the 70-m subnet, module TCI-20 for the 26-m subnet, module TCI-30 for the 34-m Standard (STD) and High Efficiency (HEF) subnets, module TCI-31 for the 34-m Beam Waveguide (BWG) and High-speed BWG (HSB) antennas, and module TCI-60 for the 9-m antenna.

2. General Information

The DSN Command System provides the capability for commanding five spacecraft from the Canberra and Madrid DSCCs. A minimum of two of these must be deep space spacecraft and a maximum of four can be deep space spacecraft. A minimum of one of the spacecraft must be an earth orbiter and a maximum of three can be earth orbiters.

The presence of an additional set of command equipment and several additional antennas at the Goldstone DSCC permits six spacecraft to be commanded.. A minimum of two

of these must be deep space spacecraft and a maximum of five can be deep space spacecraft. A minimum of one of the spacecraft must be an earth orbiter and a maximum of four can be earth orbiters.

All commands, including prefix symbols and command data symbols, are normally generated at the appropriate Mission Operations Center (MOC) or Project Operations Center (POC). A limited number of pre-defined commands may be stored at the DSCCs for use in an emergency (such as loss of communication from an operations center during a critical mission event) to place a spacecraft in a safe condition.

2.1 Power Output

The DSN Command System is capable of providing a single uplink channel from each antenna for earth orbiter or deep space support. The available power output depends on the frequency range and antenna type as described below.

2.1.1 Earth Orbiter S-band

The maximum total power output available for single-channel command modulation in the 2025-2070 MHz band or the 2090-2108 MHz band is +73 dBm (20 kW) at the output of the transmitter in the 34-m STD (DSS 42 and 61) or 34-m BWG (DSS 24, 34, and 54) subnets. The output of the transmitter in both subnets is restricted to +67 dBm (5 kW) in the 2070-2090 MHz frequency band.

The nominal total power output available at the 9-m antenna (DSS 17) and the 26-m antennas (DSS 16, 46, and 66) is +73 dBm (20 kW). However, when an adequate uplink margin exists, the 9-m and 26-m antenna power amplifiers are normally operated at about +63 dBm (2 kW) to extend klystron life. A power amplifier bypass mode providing +42 dBm (16 W) output power is also available.

The nominal total power output available at the 34-m HSB antenna (DSS 27) is +53 dBm (200 W) using a solid-state power amplifier.

The 9-m, 26-m, 34-m STD, and 34-m BWG subnets employ a step-tuned transmitter with a 20-MHz bandwidth and a 5-MHz overlap for each step in order to provide the specified frequency coverage.

2.1.2 Deep Space S-band

The maximum total power output available for single-channel command modulation in the 2110-2120 MHz band is +73 dBm (20 kW) at the output of the transmitter in the 34-m STD (DSS 42 and 61), 34-m BWG (DSS 24, 34, and 54), and the low-power transmitter in the 70-m subnet (DSS 14, 43, and 63). At the 70-m antennas, an additional transmitter with a nominal power output of +86 dBm (400 kW) is available for linking to very distant planetary spacecraft or for support during spacecraft emergencies. The remaining two 34-meter BWG antennas (DSS 25 and 26) and the 34-m HSB antenna do not have a 2110-2120 MHz uplink capability.

2.1.3 Deep Space X-band

The nominal total power output available for single-channel command modulation in the 7145-7190 MHz band is +73 dBm (20 kW) at the output of the transmitter in the 34-m high-efficiency (HEF) subnet (DSS 15, 45, and 65) and +66 dBm (4 kW) at the output of the transmitter in the 34-m BWG antennas (DSS 25, 26, 34, and 54). The remaining subnets, the BWG antenna, DSS 24, the 9-m antenna (DSS 17), and the 34-m HSB antenna (DSS 27) do not have a 7145-7190 MHz uplink capability.

2.2 Modulation Modes

The DSN Command System produces a pulse code modulated (PCM) non-return to zero-level (NRZ-L) data waveform. Manchester (Bi-phase-L) encoding is available providing a transition for each bit, i.e., 01_2 for a command bit *zero* and 10_2 for a command bit *one*.

The resultant waveform is used to modulate a subcarrier in the binary phase shift keyed (PSK) mode or to alter the frequency of a subcarrier in the frequency shift keyed (FSK) mode. If required for project support, the modulated subcarrier can be either linearly summed with the data clock (PCM/PSK - SUMMED or PCM/FSK - SUMMED) or amplitude modulated by it (PCM/PSK - AM and PCM/FSK - AM). At the 26-meter stations, the capability exists to use the composite PSK waveform to frequency modulate a 70 kHz subcarrier (PCM/PSK - SUMMED/FM and PCM/PSK - AM/FM).

2.3 Subcarrier Frequencies

2.3.1 PSK Subcarrier Frequencies

PSK subcarrier frequencies are available in the range of 100 Hz to 16 kHz with a resolution of 0.1 Hz and can be either sine wave or square wave. The NASA Planetary Program Flight/Ground Data System Standards recommend, and all NASA Standard Transponders require, a 16-kHz sine wave subcarrier.

2.3.2 FSK Subcarrier Frequencies

The two values for the FSK subcarrier frequencies must be selected from the range of 100 Hz to 16 kHz and have a resolution of 0.1 Hz. FSK subcarriers are always sine wave.

2.3.3 Stability

The stability of the PSK subcarrier or of the two values for the FSK sub-carrier is determined by the station frequency standard and is, therefore, better than ±1 part in 10^7 for all measurement times.

2.4 Data Rates

Command bit rates can be specified to 5 significant figures (e.g., 7.8125 or 1000.0).

2.4.1 PSK Data Rates

PSK data rates are available from 1 b/s to 2000 b/s, provided that the data rate multiplied by an even integer yields the subcarrier frequency. Data symbol zero crossings are coincident within ±6° of the subcarrier zero crossings.

Manchester (Bi-phase-L) encoding is available for data rates up to and including 1000 b/s giving two symbols for each bit, i.e., 01_2 for a command bit *zero* and 10_2 for a command bit *one*.

2.4.2 FSK Data Rates

FSK data rates are available from 1.0 b/s to 2000 b/s. FSK modulation is continuous phase so the change from one subcarrier frequency to the other occurs at the next zero crossing after the data transition.

2.4.3 Data Rate Stability

The stability of the selected data rate is determined by the station frequency standard and is, therefore, better than ±1 part in 10^7 for all measurement times.

2.5 Subcarrier to Data Rate Ratios

The subcarrier to data symbol rate ratio must be ≥ 8 for both PSK and FSK (using the lower of the two subcarrier frequencies, f_0) data modes. This ratio is necessary to allow adequate time to complete all parameter verifications within one command symbol interval, i.e., for completion of all checks associated with the current symbol before the start of the next symbol.

2.6 Clock Modulation and Summing

The PSK or FSK subcarrier can be amplitude modulated at the data clock frequency or linearly summed with the data clock. The phase offset between the data transitions and the clock may be set at 0, 90, 180, or 270°. The accuracy of the phase offset is within ±6-degrees of the selected value.

2.6.1 Amplitude Modulation

The amount by which the clock modulates the PSK or FSK subcarrier can be adjusted from 10 to 90 percent with a resolution of 10 percent. The accuracy of the modulation level is ±5 percent of the selected value. An illustration of clock amplitude modulation is shown in Figure 1.

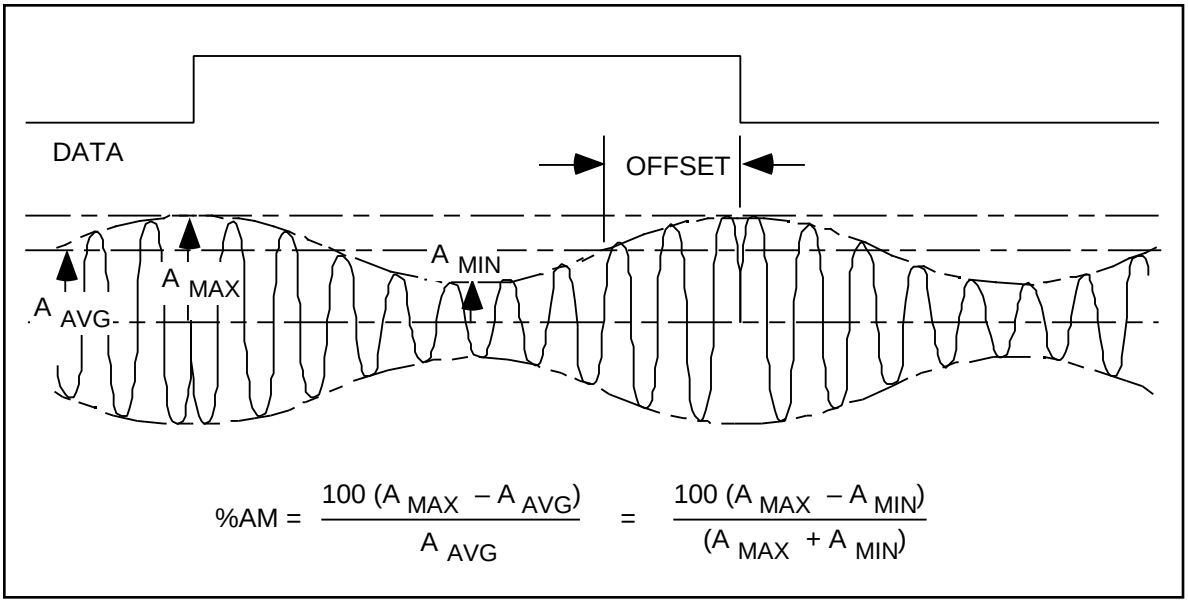

Figure 1. Amplitude Modulation of Subcarrier by Clock Frequency.

2.6.2 Clock Summing

The ratio by which the clock can be summed with the PSK or FSK subcarrier is set at 1:1 with an accuracy of ±5 percent. An illustration of clock summing is shown in Figure 2.

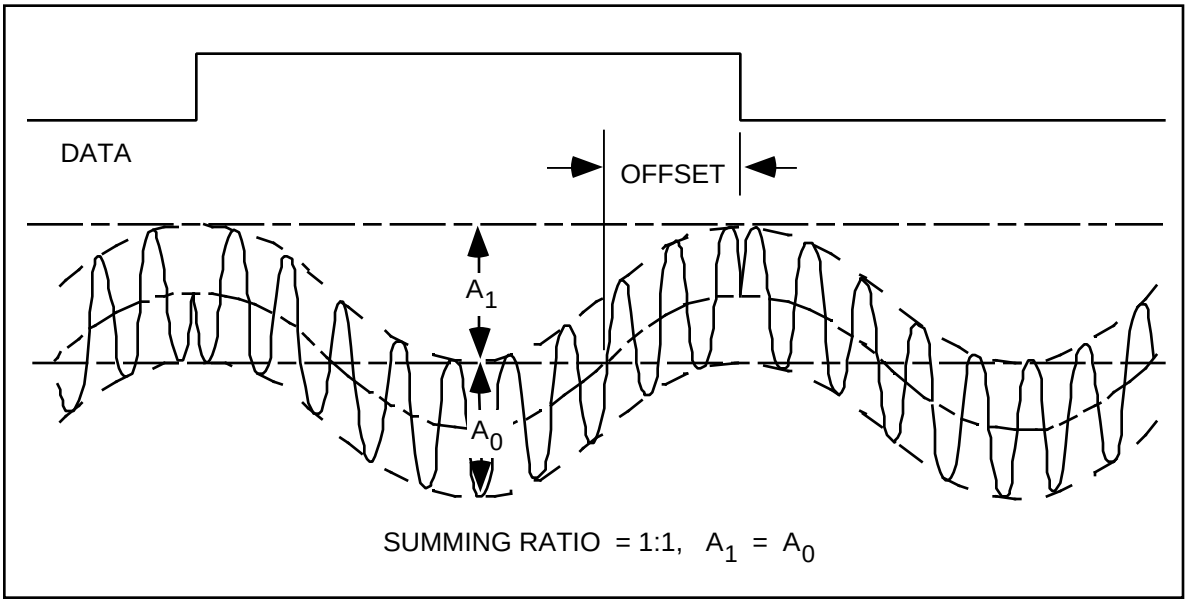

Figure 2. Summing of Subcarrier and Clock Frequency.

2.7 Frequency Modulation

When the composite PSK subcarrier is used to frequency modulate a 70-kHz subcarrier, the deviation is 5 kHz ±TBS.

2.8 Modulation Index

2.8.1 Range

The RF carrier may be phase-modulated at modulation indices from 0.3 to 1.57 rad (peak) for sine-wave or square-wave subcarriers. Pre calibrations can be provided for up to four modulation index settings per spacecraft. The modulation index for X-band carriers must be limited to 1.4 rad (peak) if verification feedback from the exciter to the command modulator (long-loop verification) is used.

2.8.2 Accuracy and Resolution

The modulation index can be set in increments of 0.009 radian (approximately 0.5°) over the range specified above. However, the method of measurement used to set the modulation index limits the calibration accuracy to ±0.1 dB (carrier suppression) for modulation indices of 0 to 3.0 dB (carrier suppression) and ±0.2 dB for modulation indices in excess of 3.0 dB. Carrier power suppression and data power suppression as functions of modulation index angle are:

1. Sinewave subcarrier:

$$\frac{P_C}{P_T}(dB) = 10\log\left[J_0^2(\Theta_D)\right]$$

$$\frac{P_D}{P_T}(dB) = 10\log\left[2J_1^2(\Theta_D)\right] \quad \{\textit{first upper and lower sidebands}\}$$

2. Square-wave subcarrier:

$$\frac{P_C}{P_T}(dB) = 10\log\left[\cos^2(\Theta_D)\right]$$

$$\frac{P_D}{P_T}(dB) = 10\log\left[\sin^2(\Theta_D)\right] \quad \{\textit{all sidebands}\}$$

where:

Θ_D = data modulation index, radians, peak

P_T = total power

P_C = carrier power

P_D = data power

J_0 = zero-order Bessel function

J_1 = first-order Bessel Function

2.8.3 Modulation Index Stability

The modulation index stability is the product of the stability of the command modulator output voltage and the exciter phase modulator input-voltage sensitivity.

- Command modulator output voltage stability is ±3% in 24 hours.
- Exciter phase modulator input voltage sensitivity is ±1% in 24 hours.

2.9 Modulation Losses

Modulation losses due to transmitter bandpass limiting in the S-band transmitters of the 26-meter, 34-meter STD, 34-m BWG, and the 9-meter antennas are eliminated through the use of a tunable klystron power amplifier.

Modulation losses due to transmitter bandpass limiting in the 34-meter HEF and 70-meter subnet transmitters are negligible over the deep space uplink allocation and can be eliminated for all permissible subcarriers by output tube selection.

Modulation losses due to transmitter bandpass limiting in the solid-state transmitters at the 34-meter BWG stations are negligible.

2.10 Deep Space Store-and-Forward Command Protocol

2.10.1 Command Data Handling

The DSN Command System design allows the Flight Project Mission Operations Center (MOC) to prepare large files of spacecraft commands in advance and forward several files to the DSCC for use during a spacecraft track. Each file may contain up to 256 blocks, where the first block is a header element and the remaining blocks are command elements. Each command element may contain up to 800 bits of spacecraft command data. A maximum of eight files can be stored at the DSCC for a given mission. Thus, the maximum storage capability may be described by any one of the following:

- 8 command files
- 8 x 255 = 2040 command elements
- 2040 x 800 = 1,632,000 command bits

After being loaded in the CPA, the files may be selected from the directory for assignment to the radiation queue. This process is called *attaching*. A five-entry queue of file names is provided. Files are attached to the end of the queue. A file must be *closed* to be eligible for attachment. The file directory status and queue status are recallable by the MOC for verification. Capabilities also exist for clearing of the file queue and for erasing individual files from the directory.

2.10.2 Execution of Timed Commands

The Store-and-Forward protocol provides the user with an option to specify the time at which the first bit in each command file is radiated. When this option is used, the desired bit-1 time is specified in tenths of seconds from the start of the calendar year (UTC). Since command radiation is controlled by a bit rate clock, the actual time of command transmission varies from slightly less than 0.1 s before the specified time to slightly less than two bit periods after the specified time, in accordance with the following rules.

- Data Rates from 1 to 10 b/s. The actual time of transmission occurs no sooner than 0.1 s before the specified time and no later than two bit periods after the specified time.
- Data Rates above 10 b/s. The actual time of transmission occurs no sooner than the specified time and no later than two it periods after the specified time.

The Store-and-Forward protocol also provides the user an option to insert a delay interval between the elements of a command file. When this option is used, a delay time interval is specified in each command element message indicating the number of tenths of seconds desired from the first bit of the previous element. The specified interval must be at least large enough to account for the time required for radiation of the previous element plus 0.3 s or two bit periods, whichever is longer. The actual time interval will be a multiple of the bit period for the data rate of the commands, and may be as much as two bit periods longer than the specified interval. When no delay time is specified in a command element message, the element is radiated contiguously with the previous element.

To improve command execution timing at low bit rates, users are encouraged to synthesize low rates from higher rates; e.g., if each (NRZ-L) data bit is represented by “n” identical bits in a command element, the desired data rate will be achieved by transmitting this element at the desired rate multiplied by n. The result of this will be to improve command execution timing by a factor of n.

2.11 Earth-Orbiter Throughput Command Protocol

A real-time *throughput command* interface is provided for Earth orbiter missions (similar to the interface required for missions supported by the Tracking and Data Relay Satellite System, TDRSS). The throughput command data handling scheme permits the MOC to send command data to the DSCC in sequences of data blocks, each of which may contain up to 4592 b of spacecraft command data. Command radiation begins when the fifth data block or the last block of a shorter sequence is received. (The last block is identified by a 1-b flag in the block header or an elapse of 3 s without receipt of another block.) The relationship between data block size and data rate must be chosen so that each data block, except the last data block, contains at least 1 s of command data.

When the outputting of received blocks has begun, any additional blocks received will be output as soon as possible in a continuous manner. Uplink will continue until all available command data are exhausted. Contiguous command data over block boundaries

can be provided, but it is the responsibility of the MOC to generate the appropriate data input rate to ensure that at least four but no more than 20 data blocks are present in the CPA until all contiguous blocks have been sent. (The maximum buffer content in the CPA is 20 blocks.) Deviations between the uplink clock at the station and the serial command generator at the MOC can cause data to be lost (if the MOC clock is faster) or gaps to occur in the uplink (if the station clock is faster). When command data are exhausted, the uplink processor reinstates the criteria described above for initial command radiation.

2.12 Emergency Support

The DSN Command System provides emergency support during communications failures between the control center and the DSCC for the purpose of placing a spacecraft into a safe condition. To support this capability, the Project can provide emergency command data which will be stored at the stations. Emergency command data will be processed under control by the link operator in accordance with Project Instructions.

2.13 Command Data Error Rate

Command data undetected error rate is less than 1 b in 10^6 transmitted bits.

The average command abort rate is less than two aborts per 10^7 transmitted bits. (This mean-time between aborts provides a 95-percent probability of modulating in excess of 2.5×10^5 contiguous bits without aborting.)

2.14 Command Mode

The Command Subsystem at each DSCC has six operating modes: Calibrate 1, Calibrate 2, Idle 1, Idle 2, Active, and Abort. Each of the six command modes is related to a particular phase of the Command Subsystem operation. The command mode is selectable from the MOC when the Command System is operating with the Store-and-Forward protocol. The Calibrate 2 and Idle 1 modes are not available when operating with Throughput protocol and the operating mode must be selected at the DSCC.

Table 1 describes the waveform and transmit capabilities for each mode. The configuration used for each mode is established by the Network Operations Control Center (NOCC) in accordance with flight project requirements. Where idle sequences are permitted, the Idle 1 and Idle 2 symbol patterns may be alike or different, depending on spacecraft requirements.

Table 1. Waveform and Transmit Capabilities.

Mode	Subcarrier	Idle Sequence	Transmitter Required Active?
Calibrate 1	yes	yes	yes (dummy load)
Calibrate 2	no	no	no
Idle 1	optional	optional	optional
Idle 2	optional *	optional *	optional
Active	yes	(command)	yes
Abort	optional	optional	optional

* *Yes, for subsystem self-test*

Input and output messages are permitted or inhibited depending on the particular mode in use, as shown below in Figure 3.

2.15 Idle Sequences

For command operations in either of the two idle modes, the available modulation options are: (a) subcarrier with a locally generated repetitive bit pattern, (b) subcarrier only (unmodulated), and (c) no modulation (carrier only).

2.16 Space Shuttle Commanding

The 26-meter subnet provides Space Shuttle Orbiter command support as described in GSFC Document ME 8043, *Shuttle Forward Link Data System.*

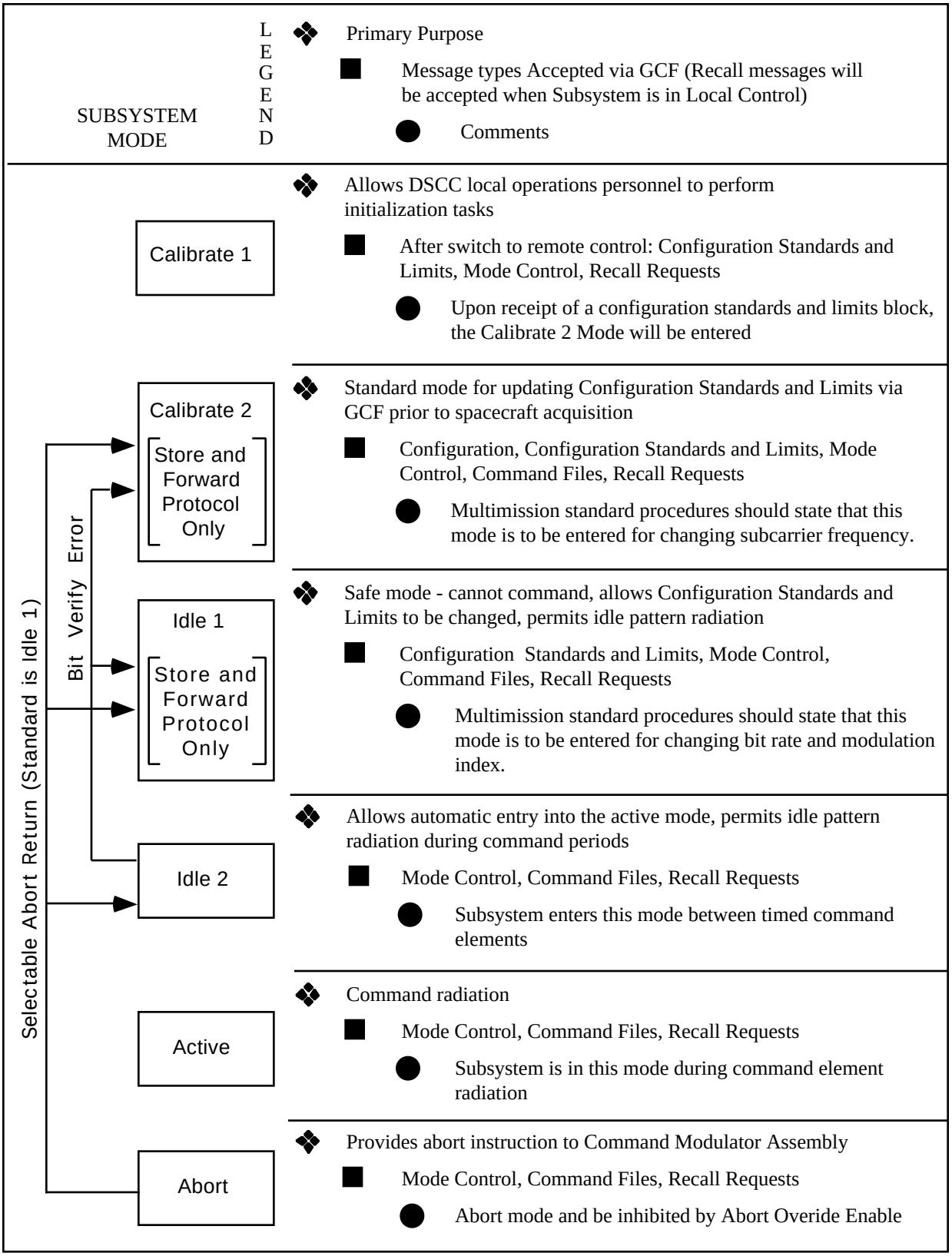

Figure 3. Command Subsystem Modes