Deep Space Network

104
34-m BWG Stations Telecommunications Interfaces

Document Owner:		Approved by:	
Signature Provided	03/18/2021	Signature Provided	03/18/2021
Stephen D. Slobin Antenna System Engineer	Date	Timothy T. Pham Communications Systems Chief Engineer	Date

Prepared by:		Released by:	
Signature Provided	03/18/2021	Signature Provided	04/02/2021
Stephen D. Slobin Antenna System Engineer	Date	Christine Chang DSN Document Release Authority	Date

DSN No. **810-005, 104, Rev. M**
Issue Date: April 02, 2021
JPL D-19379; CL#21-1499

Jet Propulsion Laboratory
California Institute of Technology

Users must ensure that they are using the current version in DSN Telecommunications Link Design Handbook website:
https://deepspace.jpl.nasa.gov/dsndocs/810-005/

© <2021> California Institute of Technology.
U.S. Government sponsorship acknowledged.

Review Acknowledgment

By signing below, the signatories acknowledge that they have reviewed this document and provided comments, if any, to the signatories on the Cover Page.

Signature Provided	03/05/2021	Signature not Provided	
Jeff Berner DSN Project Chief Engineer	Date	John Cucchissi Antenna System Engineer	Date
Signature not Provided		Signature Provided	03/17/2021
Michael Settember Uplink System Engineer	Date	David Rochblatt Antenna System Engineer	Date

Document Change Log

Rev	Issue Date	Prepared By	Affected Paragraphs	Change Summary
Initial	11/30/2000	S. Slobin R. Sniffin	All	All
A	2/5/2004	S. Slobin R. Sniffin	All	Added performance information for Ka-band capability at DSS-26 and for new station, DSS-55. Incorporated latest measurements for other stations. Incorporated text improvements.
B	8/1/2005	S. Slobin R. Sniffin	Tables 4, 5, A-1, A-2, A-3, Figures 4, 9, 14, 20, and 25.	Revised performance information for DSS-34 to reflect addition of Ka-band and X-band improvements. Required splitting of Table 4 into Tables 4 and 5, renumbering subsequent tables, revision of Figures 9 and 20, and addition of Figures 4, 14, and 25.
C	9/19/2008	S. Slobin R. Sniffin	Sections 2.1.3, 3.0; All Tables; Figures 1, 3, 4, 6 - 27	Documents installation of an X-band acquisition capability at DSS-24, -34, and -54. Revised T_{AMW} formulation for noise temperature to be consistent with Rev. B of module 105. Added proposed 26 GHz capability at DSS-24, -34, and -54.
D	5/15/2009	S. Slobin R. Sniffin	Tables 6, 11 Figures 13-15, 27-29, 36 Table A-3	Add K-band gain and noise temperature performance for DSS-24, -34, and -54.
E	9/15/2009	S. Slobin	Table A-4	Updated Ka-band G and T parameters for DSS-54 and DSS-55. HEMT numbering has also been corrected in that Table.
F	6/1/2010	S. Slobin	Table 6 Table 11 Figures 27, 28, 29 Table A-3	New K-band receive Tamw values New K-band receive Tamw and Top values New figures for K-band New K-band Tamw parameters Eliminated the Rev. E designation for the document series

Rev	Issue Date	Prepared By	Affected Paragraphs	Change Summary
G	03/05/2013	S. Slobin	Table 10 Section 2.1.1.3 Table A-5 Figures 16-19 and 30-33;	Revised references to wind effects. Section 2.1.1.3 re-written to address gain and pointing effects due to wind. Values in Table A-5 changed slightly. Figures 16-19 and 30-33 changed slightly. Minor cosmetic changes throughout.
H	04/01/2015	Stephen Slobin Christine Chang	Rev.G Tables 3,9 Figures 5,7,21 Section 2 & Table 1 Table 1 Tables 1,4 Table 3 Tables 6 & 7 Table 7 Table 8 Table 9 Figure 2 Figure 3 Figures 9, 18, 24, 33 Tables A-2 & A-4 Table A-3 Sections 2, 3 Tables 1, 3	Deleted. DSS-27 HSB antenna decommissioned. Added DSS-35 capabilities. Clarified no simultaneous X-band RCP and LCP for DSS-34 and -54. Clarified simultaneous Ka-band RCP and LCP operation. Corrected S-band uplink power. Updated Ka-band uplink power. Added DSS-35 transmit values. Clarified location of X-band acquisition antennas. Added note about low-gain mode noise temperature increase at X- and Ka-bands. Added DSS-35 receive values. Corrected Ka-band polarizations. Revised X-band HEMT bandwidths. Updated wind effect gain reduction. Added DSS-35 Tamw and Top values. Removed note on transmit table. Added DSS-35 to caption. Added DSS-35 X- and Ka-band gain and noise temperatures. Added DSS-35 gain and noise temperature parameters. Added notes about low-gain mode noise temperature increase at X- and Ka-bands. Added note about low-gain mode noise temperature increase at K-band. Added details of 80 kW X-band transmitter at DSS-26.

Rev	Issue Date	Prepared By	Affected Paragraphs	Change Summary
I	02/10/2017	Stephen Slobin Christine Chang	Sections 2, 3 Table 1 Tables 1, 2, 3, 5, 7, 9 Figure 3 Figure 5 Figure 6 Figures 7, 24 Figures 12, 22 Figures 29, 39 Figures 1-44 Tables A-1, A-2, A-4 Table A-1	Implementation dates for future antennas DSS-33, -53, -56, and 80 kW X-band transmitter additions at future antennas DSS-33, -53. DSS-36 added. DSS-55 removed, new high-power X-band feed shown. New for DSS-36. New for DSS-55. Re-drawn for DSS-34, replacing DSS-24. New for DSS-36 X- and Ka-band gain. New for DSS-36 X- and Ka-band noise temperatures. Renumbered to accommodate four new DSS-36 figures and two additional block diagrams. DSS-36 added. S-band G_0 uplink gains for DSS-24, -34, -54 re-calculated.
J	01/12/2018	Stephen Slobin Christine Chang	Tables 1, 2, A-1 Table 2 Table 3 Table 4 Table 5 All tables, including Appendix Tables A1, A2, A4 Figure 2 Figures 3, 4, 5, 6 Figure 4	DSS-36 S-band uplink clarified – near-earth only. S-band gains and EIRP re-calculated. X-band gains and EIRP re-calculated. Ka-band gains and EIRP re-calculated. New tolerances for K-band Tamw in S/K-mode. Uplink and downlink bands center frequencies stated accurately. Uplink and downlink gain adjustments noted for near-earth bands. Ka-band hyperboloid redrawn. Ka-band downconverter outputs clarified. X-band downconverter outputs clarified.

Rev	Issue Date	Prepared By	Affected Paragraphs	Change Summary
K	07/17/2019	Stephen Slobin Christine Chang	Section 3 Table 1 Tables 2, 5, 9 Tables 4, 7, 9 Figures 1-12 Appendix A-1 Appendix A-2 Appendix A-4 Figures 14, 31 Figures 24, 41	Updated operational dates New DSS-26 added for S-band New DSS-25 G, T Re-drawn and re-numbered DSS-26 added for S-band New DSS-25 X-band G, T New DSS-25 Ka-band G, T New DSS-25 X-band G, T New DSS-25 Ka-band G, T
L	10/16/2019	Stephen Slobin Christine Chang	Section 2 Table 1 Table 2	Changed to indicate DSS-54 not usable in S-band uplink deep-space band (2110-2120 MHz)
M	04/02/2021	Stephen Slobin Christine Chang	Section 3 Table 1 Tables 1, 3 Tables 2, 3, 5, 7, 9, A-1, A-2, A-3, A-4 All tables and appendices Table 9 Table A-5 Figures 1, 5, 9, 12 Figures 4, 8	Added new implementations and revised dates Corrected DSS-24 X-band polarization Removed 5.7 kW X-band transmit limit for near-earth Added performance values for DSS-56 Placeholders added for future antennas and implementations Updated Tsky values to agree with module 105, Rev. E Latest module 105 (Rev. E) atmosphere attenuation values added Block diagrams added for future DSS-23, -33, -53, and new -56 K-band equipment added

Table of Contents

Section 1 Introduction 12

1.1 Purpose 12

1.2 Scope 12

Section 2 General Information 13

2.1 Telecommunications Parameters 15

2.1.1 Antenna Gain Variation 15

2.1.1.1 Frequency Effects 15
2.1.1.2 Elevation Angle Effects 15
2.1.1.3 Wind Effects 16

2.1.2 System Noise Temperature Variation 16

2.1.3 Antenna Pointing 17

2.1.3.1 Pointing Accuracy 17
2.1.3.2 Pointing Loss 18
2.1.3.3 Monopulse-aided Pointing 18
2.1.3.4 Ka-Band Aberration Correction 18
2.1.3.5 X-Band Acquisition 18

Section 3 Proposed Capabilities 19

Appendix A Equations for Modeling A-1

A.1 Equations for Gain Versus Elevation Angle A-1

A.2 Equations for System Temperature Versus Elevation Angle A-1

A.3 Equation for Gain Reduction Versus Pointing Error A-3

A.4 Equation for Transmit Aberration Gain Reduction A-3

List of Tables

Table 1. Summary of Available Configurations for Each Antenna 20
Table 2. S-Band Transmit Characteristics, DSS-24, -26, -34, -36, -54, and -56 24
Table 3. X-Band Transmit Characteristics, DSS-23, -24, -25, -26, -33, -34, -35, -36, -53, -54, -55, and -56 27
Table 4. Ka-Band Transmit Characteristics, DSS-25 30
Table 5. S- and K-Band Receive Characteristics, DSS-24, -26, -34, -36, -54, ... 32
Table 6. X-Band Receive Characteristics, DSS-24 34
Table 7. X- and Ka-Band Receive Characteristics, DSS-23, -25, -26, -33, -34, -35, -36, -53, -54, -55, and -56 36
Table 8. Gain Reduction Due to Wind Effects on Structural Deformation and Pointing Error 41
Table 9. T_{AMW}, T_{sky}, and T_{op} for CD=25% Average Clear Weather at Zenith, Referenced to Feedhorn Aperture 42

Table A-1. S-Band Vacuum Gain and Antenna-Microwave Noise Temperature Parameters, Referenced to Feedhorn Aperture A-4
Table A-2. X-Band Vacuum Gain and Antenna-Microwave Noise Temperature Parameters, Referenced to Feedhorn Aperture A-6
Table A-3. K-Band Vacuum Gain and Antenna-Microwave Noise Temperature Parameters, Referenced to Feedhorn Aperture A-10
Table A-4. Ka-Band Vacuum Gain and Antenna-Microwave Noise Temperature Parameters, Referenced to Feedhorn Aperture A-14
Table A-5. S-, X-, K-, and Ka-Band Zenith Atmospheric Attenuation (A_{zen}) A-17

List of Figures

Figure 1. Functional Block Diagram of the DSS-23 Antenna. 46
Figure 2. Functional Block Diagram of the DSS-24 Antenna 47
Figure 3. Functional Block Diagram of the DSS-25 Antenna 48
Figure 4. Functional Block Diagram of the DSS-26 Antenna 49
Figure 5. Functional Block Diagram of the DSS-33 Antenna 50
Figure 6. Functional Block Diagram of the DSS-34 Antenna 51
Figure 7. Functional Block Diagram of the DSS-35 Antenna 52
Figure 8. Functional Block Diagram of the DSS-36 Antenna 53
Figure 9. Functional Block Diagram of the DSS-53 Antenna 54
Figure 10. Functional Block Diagram of the DSS-54 Antenna 55
Figure 11. Functional Block Diagram of the DSS-55 antenna 56
Figure 12. Functional Block Diagram of the DSS-56 Antenna 57
Figure 13. DSS-34 (Canberra) S-Band Receive Gain versus Elevation Angle, S/X- Mode (S/X Dichroic In Place), 2295 MHz 58
Figure 14. DSS-25 (Goldstone) X-Band Receive Gain versus Elevation Angle, X/Ka-Mode, 8420 MHz 58
Figure 15. DSS-26 (Goldstone) X-Band Receive Gain versus Elevation Angle, X/Ka-Mode, 8420 MHz 59
Figure 16. DSS-34 (Canberra) X-Band Receive Gain versus Elevation Angle, X/Ka-Mode (S/X Dichroic Retracted), 8420 MHz 59
Figure 17. DSS-35 (Canberra) X-Band Receive Gain versus Elevation Angle, X/Ka-Mode, 8420 MHz 60
Figure 18. DSS-36 (Canberra) X-band Receive Gain versus Elevation Angle, X/Ka-Mode, 8420 MHz 60
Figure 19. DSS-54 (Madrid) X-Band Receive Gain versus Elevation Angle, X/Ka-Mode (S/X Dichroic Retracted), 8420 MHz 61
Figure 20. DSS-55 (Madrid) X-Band Receive Gain versus Elevation Angle, X/Ka Mode, 8420 MHz 61
Figure 21. DSS-24 (Goldstone) K-Band Receive Gain versus Elevation Angle, K-Only Mode (S/K Dichroic Retracted), 26000 MHz 62
Figure 22. DSS-34 (Canberra) K-Band Receive Gain versus Elevation Angle, K-Only Mode (S/K Dichroic Retracted), 26000 MHz 62
Figure 23. DSS-54 (Madrid) K-Band Receive Gain versus Elevation Angle, K-Only Mode (S/K Dichroic Retracted), 26000 MHz 63
Figure 24. DSS-25 (Goldstone) Ka-Band Receive Gain versus Elevation Angle, X/Ka-Mode, 32000 MHz 63

Figure 25. DSS-26 (Goldstone) Ka-Band Receive Gain versus Elevation Angle, X/Ka-Mode, 32000 MHz 64
Figure 26. DSS-34 (Canberra) Ka-Band Receive Gain versus Elevation Angle, X/Ka-Mode, 32000 MHz 64
Figure 27. DSS-35 (Canberra) Ka-Band Receive Gain versus Elevation Angle, X/Ka-Mode, 32000 MHz 65
Figure 28. DSS-36 (Canberra) Ka-Band Receive Gain versus Elevation Angle,X/Ka-Mode, 32000 MHz 65
Figure 29. DSS-55 (Madrid) Ka-Band Receive Gain versus Elevation Angle,X/Ka-Mode, 32000 MHz 66
Figure 30. DSS-34 (Goldstone) S-Band System Temperature versus Elevation Angle, S/X-Mode (S/X Dichroic In Place), Non-Diplexed Path, 2295 MHz....66
Figure 31. DSS-25 (Goldstone) X-Band RCP System Temperature versus Elevation Angle, X/Ka-Mode, 8420 MHz 67
Figure 32. DSS-26 (Goldstone) X-Band RCP System Temperature versus Elevation Angle, X/Ka-Mode, 8420 MHz 67
Figure 33. DSS-34 (Canberra) X-Band RCP System Temperature versus Elevation Angle, X/Ka-Mode (S/X Dichroic Retracted), 8420 MHz 68
Figure 34. DSS-35 (Canberra) X-Band RCP System Temperature versus Elevation Angle, X/Ka-Mode, 8420 MHz 68
Figure 35. DSS-36 (Canberra) X-Band RCP System Temperature versus Elevation Angle, X/Ka-Mode, 8420 MHz 69
Figure 36. DSS-54 (Madrid) X-Band RCP System Temperature versus Elevation Angle, X/Ka-Mode (S/X Dichroic Retracted), 8420 MHz....69
Figure 37. DSS-55 (Madrid) X-Band RCP System Temperature versus Elevation Angle, X/Ka-Mode, 8420 MHz 70
Figure 38. DSS-24 (Goldstone) K-Band RCP System Temperature versus Elevation Angle, K-only Mode (S/K Dichroic Retracted), 26000 MHz....70
Figure 39. DSS-34 (Canberra) K-Band RCP System Temperature versus Elevation Angle, K-only Mode (S/K Dichroic Retracted), 26000 MHz....71
Figure 40. DSS-54 (Madrid) K-Band RCP System Temperature versus Elevation Angle, K-only Mode (S/K Dichroic Retracted), 26000 MHz 71
Figure 41. DSS-25 (Goldstone) Ka-Band RCP System Temperature versus Elevation Angle, X/Ka-Mode, 32000 MHz 72
Figure 42. DSS-26 (Goldstone) Ka-Band RCP System Temperature versus Elevation Angle, X/Ka-Mode, 32000 MHz 72
Figure 43. DSS-34 (Canberra) Ka-Band RCP System Temperature versus Elevation Angle, X/Ka-Mode, 32000 MHz 73
Figure 44. DSS-35 (Canberra) Ka-Band RCP System Temperature versus Elevation Angle, X/Ka-Mode, 32000 MHz 73

Figure 45. DSS-36 (Canberra) Ka-Band RCP System Temperature versus Elevation Angle, X/Ka-Mode, 32000 MHz 74
Figure 46. DSS-55 (Madrid) Ka-Band RCP System Temperature versus Elevation Angle, X/Ka-Mode, 32000 MHz 74
Figure 47. S-Band Gain Reduction versus Angle off Boresight....75
Figure 48. X-Band Gain Reduction versus Angle off Boresight....75
Figure 49. K- and Ka-Band Gain Reduction versus Angle off Boresight 76
Figure 50. Ka-Band Transmit Gain Reduction Due to Aberration Correction....76

Section 1
Introduction

1.1 Purpose

This module provides the performance parameters for the Deep Space Network (DSN) 34m Beam Waveguide (BWG) antennas that are necessary to perform the nominal design of a telecommunications link. It also summarizes the capabilities of these antennas for mission planning purposes and for comparison with other ground station antennas.

Because of the large number of BWG antennas, the four frequency bands, and the large number of operating modes and configurations, the reader will find it helpful to refer to Tables A-1 through A-4, in addition to Table 1, to keep the capabilities and differences among the antennas clear. Reference to the antenna block diagrams (Figures 1 through 12) will clearly show the microwave equipment configurations

1.2 Scope

The scope of this module is limited to providing those parameters that characterize the RF performance of the 34-meter BWG antennas, including the effects of weather for a limited number of weather conditions. A more complete discussion of weather effects is given in module 105, Atmospheric and Environmental Effects. This module does not discuss mechanical restrictions on antenna performance covered in module 302, Antenna Positioning.

Section 2
General Information

The 34-meter diameter BWG (beam waveguide) antennas are the latest generation of antennas built for use in the DSN. These antennas differ from more conventional antennas (for example, the 34-meter HEF antennas, described in module 103) in the fact that a series of mirrors, approximately 2.4 meters in diameter, direct microwave energy from the region above the main reflector to a location in a pedestal room at the base of the antenna. The pedestal room is located below the azimuth track of the antenna and is below ground level.

In this configuration, several “positions” of microwave equipment contained in the pedestal room can be accessed by rotation of an ellipsoidal mirror located in the center of the pedestal room floor beneath the azimuth axis of the antenna. This enables great versatility of design and allows tracking with equipment at one position while equipment installation or maintenance is carried out at the other positions. Since cryogenic low-noise amplifiers (LNAs) do not tip as they do when located above the elevation axis, certain state-of-the-art low noise amplifier and feed designs can be implemented.

The capabilities of each antenna differ depending on the microwave transmitting and receiving equipment installed. A summary of these capabilities is provided in Table 1. Functional block diagrams for each antenna are provided in Figures 1 through 12. K-band equipment for DSS-26 and DSS-36 is shown, although installation is not until 2022 and 2021, respectively (see Section 3 and Table 1). Block diagrams for future antennas DSS-23, -33, and -53 are also shown. In general, each antenna has at least one LNA for each supported frequency band. However, stations that can support simultaneous right circular polarization (RCP) and left circular polarization (LCP) in the same band have an LNA for each. In addition, the stations that support Ka-band contain an additional LNA to enable monopulse tracking when using RCP polarization. Each antenna also has at least one transmitter. Antennas with more than one transmitter can operate only one of them at a time. DSS-25 is an exception and has a Ka-band transmitter that can be operated at the same time as its X-band transmitter.

There are six stations, DSS-24, -26, -34, -36, -54, and -56 that are capable of receiving selectable (one polarization at a time) RCP or LCP at S-band. DSS-24, -34, and -54 are also capable of simultaneously (with S-band) or independently receiving selectable (one polarization at a time) RCP or LCP at X-band due to the fact that there is only a single LNA at DSS-24, and a single X-band downconverter at DSS-34, and -54. The remaining BWG stations, DSS-25, -26, -35, -36, -55, and -56 can receive both X-band polarizations simultaneously. K-band (26 GHz) receive capability with selectable (one polarization at a time) RCP or LCP exists at DSS-24, -34, -54. and -56. Ka-band capability, including monopulse-assisted tracking of RCP signals, exists at DSS-25, -26, -34, -35, -36, -54, -55, and -56. These stations can also receive Ka-band RCP and LCP simultaneously for radio science investigations, without monopulse-assisted tracking. Future antennas DSS-23, -33, and -53 are not discussed here at this time. Their proposed capabilities are shown in Table 1.

The 26 GHz receive capability can be used independently or in combination with the station’s S-band capability to provide a high data rate capability for spacecraft operating at near-Earth distances (less than 2×10^6 km). A low-gain mode is included to accommodate high signal levels that are expected during the early post-launch phase of 26 GHz missions. Neither the X-band

receive capability at DSS-24, nor the X-band or Ka-band receive capabilities at DSS-34, -54, and -56 are available when K-band receive is being used at these stations. The retractable mirror over the X-band or X/Ka-band feeds must be retracted for K-band reception. S-band performance in the S/X and S/K modes is identical. The S-band transmitters at DSS-26, -36, and -56 are 250 W, and due to the low power are usable only for near-earth applications. The S-band transmitters at DSS-24, -34, -54 are 20 kW, however DSS-54 is not available for use in the deep space frequency band (2110-2120 MHz) due to conflict with IMT-2000 users, per agreement between NASA and Secretaria de Estado de Telecomunicaciones y para la Sociedad de la Informacion (SETSI), January, 2001. These S-band transmitters, and the X-band transmitter at DSS-24, are coupled into the microwave path using a frequency-selective diplexer. Because the diplexer increases the operating system noise temperature, a non-diplexed path for receive-only operation is provided at all of these antennas. The X-band diplexing function at DSS-25, -26, -34, -35, -36, -54, -55, and -56 is accomplished using the frequency-selective characteristics of the feed in conjunction with an external polarizing network. This technique does not affect the operating system temperature, so they are considered to be always diplexed and no lower-noise non-diplexed configuration is necessary or available. All BWG antennas have a 20 kW X-band transmitter; and additionally, DSS-26 has an 80 kW transmitter.

When an S-band uplink is required, the received S-band polarization must be the same as is being transmitted. X-band uplinks can be of either polarization, independent of the polarization of any signals being received. X-band uplinks are not available in conjunction with S-band downlinks due to bandwidth restrictions of the S/X dichroic plate. This dichroic plate must be retracted for X-band uplink operation, and simultaneous S-band downlink is no longer available. Thus the X-band uplink gain for the S/X mode is shown as “N/A” in Table A-2.

DSS-24, -26, -34, -36, -54, and -56 have a retractable S/X dichroic plate to enable operation in an S/X downlink mode, or X-only if the dichroic plate is retracted. Additionally, DSS-24, -34, -54, and -56 also have a retractable S/K (S/26 GHz) dichroic plate for operation in an S/K mode or K-only if both dichroic plates are retracted. When the S/X or S/K dichroics are being retracted or extended, there will be about a one minute interruption of signal due to the blockage and/or mis-positioning of the dichroic plates.

The S-band transmitters at DSS-24, -34, and -54, when operated near their maximum power rating, produce sufficient 13th harmonic power to adversely affect telemetry reception in the 26 GHz band. Mission designers selecting an uplink frequency between 2025 and 2076.9 MHz and requiring a radiated power in excess of 5.0 kW should select a downlink frequency such that the 13th harmonic of the uplink frequency does not fall within the bandwidth required for their telemetry.

When simultaneous X-band uplink and downlink of the same polarization are required at the only station with a waveguide diplexer (DSS-24), reception must be through the diplexer, and the noise will be increased over that of the non-diplexed path. DSS-25, -26, -34, -35, -36, -54, -55, and -56 have two X-band LNAs, one for each polarization. As these stations do not have waveguide diplexers, the system noise temperature in each polarization is approximately the same. Although there are two X-band LNAs at DSS-34 and DSS-54, there is only a single-channel X-band downconverter, thus simultaneous RCP and LCP reception is not possible.

Additionally, all BWG antennas offer a low-gain mode (−20 dB) for use at high received signal power levels for spacecraft near the Earth. The X- and Ka-band low-gain equipment is not

shown in the antenna block diagrams in this module (only K-band is, for DSS-24, -34, and -54). Reference to the HEF antenna block diagrams of 810-005 module 103 will show the X-band low-gain equipment for those antennas.

2.1 Telecommunications Parameters

The significant parameters of the 34-meter BWG antennas that influence the design of the telecommunications link are listed in Tables 2 through 9. Variations of these parameters that are inherent in the design of the antennas are discussed below. Other factors that degrade link performance are discussed in modules 105 (Atmospheric and Environmental Effects) and 106 (Solar Corona and Solar Wind Effects).

The values in these tables (except for Table 9) do not include the effects of the atmosphere. However, the attenuation and noise-temperature effects of weather for three specific weather conditions are included in the figures at the end of the module so that they may be used for a quick estimate of telecommunications link performance for those specific conditions, without reference to module 105. For detailed design control table use, the more comprehensive and detailed S-, X-, K-, and Ka-band weather effects models (for weather conditions up to 99% cumulative distribution) in module 105 should be used.

2.1.1 Antenna Gain Variation

Because the gain is referenced to the feedhorn aperture, such items as diplexers and waveguide runs to alternate LNAs that are “downstream” (below the feedhorn aperture, toward the LNA), do not affect the gain at the reference plane. Dichroic plates that are “upstream” of the feedhorn aperture cause a reduction in gain.

2.1.1.1 Frequency Effects

Antenna gains are specified at the indicated frequency (f_0). The gain varies as frequency-squared. For operation at higher or lower frequencies in the same band, the gain (dBi) must be increased or reduced, respectively, by 20 log (f/f_0).

2.1.1.2 Elevation Angle Effects

Structural deformation causes a reduction in gain when the antenna is operated at an elevation angle other than where the reflector panels were aligned. The effective gain of the antenna also is reduced by atmospheric attenuation, which is a function of elevation. Figures 13 through 29 show representative curves of gain versus elevation angle for selected stations and configurations. These figures typically show the highest gain configuration for each stated antenna and frequency band (e.g, X-band for DSS-34 in the X/Ka-mode with the S/X dichroic retracted, rather than in the S/X-mode with the S/X dichroic extended). The gain curves show the hypothetical vacuum (no atmosphere) condition, and the gain with 0%, 50%, and 90% weather conditions, designated as CD (cumulative distribution) = 0.00, 0.50, and 0.90. 0% means minimum weather effect (exceeded 100% of the time); 90% means that effect which is exceeded only 10% of the time. Qualitatively, 0% corresponds to the driest, lowest-loss condition of the atmosphere; 25% corresponds to average clear; 50% corresponds to humid or very light clouds; and 90% corresponds to very cloudy, but with no rain. Appendix A provides the complete set of parameters from which these curves were created. The atmospheric parameters used to generate

these curves are from module 105, Rev. D, as shown in Table A-5. These parameters, in combination with the weather effects parameters from module 105, can be used to calculate the gain versus elevation angle curves for any antenna, in any configuration, for weather conditions up to 99% CD.

2.1.1.3 Wind Effects

A study of tracking data from the Kepler spacecraft at Ka-band during windy conditions shows minimal effects on gain degradation (due to structural deformation of the antenna) and pointing loss (due to gusty winds of varying direction). A realistic upper limit of these effects at Ka-band can be considered to be 0.8 dB for wind speeds up to 50 km/hr. The effects at S-, X-, and K-bands, all lower frequencies, are expected to be even less than at Ka-band. Cumulative probability distributions of wind velocity at Goldstone are given in module 105. At Goldstone, the windiest of the DSN antenna locations, 50 km/hr wind is exceeded about 2% of the year and 5% of the worst month (April). An estimate of these effects at S-, X-, K-, and Ka-bands at wind speeds of 10, 30, and 50 km/hr is shown in Table 8.

2.1.2 System Noise Temperature Variation

The operating system temperature (T_{op}) varies as a function of elevation angle due to changes in the path length through the atmosphere and ground noise received by the sidelobe pattern of the antenna. Figures 30 through 46 show the combined effects of these factors for the same set of stations and configurations selected above. These figures typically show the lowest noise configuration for each stated antenna and frequency band (e.g., X-band for DSS-34 in the X/Ka-mode with the S/X dichroic retracted, rather than in the S/X-mode the S/X dichroic extended). The figures show the antenna and microwave contribution alone, and also the system operating noise temperature (T_{op}) with 0%, 50%, and 90% weather conditions. The equations and parameters for these curves are provided in Appendix A.2 and can be used, in combination with the weather effects parameters from module 105, to calculate the system temperature versus elevation curve for any antenna, in any configuration, for weather conditions up to 99% CD. The values of zenith atmospheric attenuation (A_{zen}) used in generating these figures are given in Table A-5, using module 105, Rev. D values.

The system operating noise temperature, T_{op}, consists of two parts, an *antenna-microwave component*, T_{AMW}, for the contribution of the antenna and microwave hardware only, and a *sky component*, T_{sky}, that consists of the atmosphere noise, plus the cosmic microwave background (CMB) noise attenuated by the atmosphere loss. T_{AMW} is shown in Figures 30 through 46 as "ANT-UWV". The system operating noise temperature is given by

$$T_{op}(\theta) = T_{AMW} + T_{sky} = \left[T_1 + T_2 e^{-a\theta}\right] + \left[T_{atm}(\theta) + T'_{CMB}(\theta)\right]$$

where

T_1, T_2 and a are coefficients and exponent given in Appendix A, Table A-1 through Table A-4

T_{atm} is the atmosphere contribution term, calculated from Module 105

T'_{CMB} is the attenuated cosmic contribution, calculated from Module 105

More details of this calculation are given in Appendix A of this module.

The T_{AMW} noise temperature values in Tables 5 through 9 are stated with reference to the feedhorn aperture and arise from antenna and microwave hardware contribution only. No atmosphere or cosmic background contribution is included. Table 9 presents values of T_{AMW}, T_{sky}, and T_{op} for all antenna frequencies and configurations at zenith, with average-clear CD = 0.25 weather. The values of T_{sky} in Table 9 are calculated by methods presented in Module 105, using year-average attenuation values of that module. The values of A_{zen} used in calculating T_{sky} for CD = 25% average clear weather are given in Table A-5 (Module 105, Rev. E).

At DSS-36, the addition of quadripod leg shields to reduce transmitted power in the near field has resulted in a T_{AMW} with a small "bump" of about 4-5 K at X-band and 1 K at Ka-band in the elevation range of 6-12 degrees. Additionally, the Ka-band T_{AMW} shows a pronounced decrease in noise temperature with decreasing elevation angle, which X-band does not. The curve fit for X-band shows a small rise of noise temperature with decreasing elevation angle, and the Ka-band curve shows a much larger decrease. See Figures 35 and 45, and Appendices A-2 and A-4. Normal exponential curve fitting to the data attempts to minimize the T_{op} error when creating a system noise temperature model for 90% CD weather, a model which is typically used in telecom link design. The range of T_{op} errors of this model in the 6-12 degree elevation range is 0.1 dB low (optimistic) to 0.2 dB high (pessimistic). It is felt that these low errors are acceptable for typical telecom link design.

System noise temperature increases in the low-gain mode can be approximated for telecom modeling purposes as +20 K at X-band, +180 K at K-band, and +70 K at Ka-band.

2.1.3 Antenna Pointing

2.1.3.1 Pointing Accuracy

The pointing accuracy of an antenna, often referred to as its *blind-pointing* performance, is the difference between the calculated (or commanded) beam direction and the actual beam direction. The error is typically random (after the systematic contributions have been removed by a "blind pointing model") and can be divided into two major categories. The first of these includes the computational errors and uncertainties associated with the radio sources used to calibrate the antenna, and the location of the spacecraft provided by its navigation team. The second has many components associated with converting a calculated beam direction to the physical positioning of a large mechanical structure. Included are such things as atmospheric wind and refraction effects, servo and encoder errors, thermally and gravitationally induced structural deformation, azimuth track leveling (for an azimuth-elevation antenna), and both seismic and diurnal ground tilt.

Blind pointing is modeled by assuming equal pointing performance in the elevation (EL) and cross-elevation (X-EL) directions. That is, the random pointing errors in each direction have uncorrelated Gaussian distributions with the same standard deviation. This results in a Rayleigh distribution for pointing error where the mean radial error is 1.2533 times the standard deviation of the EL and X-EL components. For a Rayleigh distribution, the probability that the pointing

error will be less than or equal to the mean radial error is 54.4%. Conversely, the probability that the mean radial error will be exceeded is 45.6%.

810-005 module 302 (Antenna Positioning) presents blind pointing performance (mean radial error) for the DSN antennas.

2.1.3.2 Pointing Loss

Figures 47 through 49 show the effects of pointing error on effective transmit and receive gain of the antenna. These curves are Gaussian approximations based on measured and predicted antenna beamwidths. The equations used to derive the curves are provided in Appendix A.3.

2.1.3.3 Monopulse-aided Pointing

Ka-band monopulse-aided pointing uses a monopulse tracking coupler within the cryogenic feed package to establish a feed pattern with a theoretical null on axis. The magnitude of the pointing error is proportional to the magnitude of the signal received by this pattern and the azimuthal error is proportional to the phase difference between the sum and difference outputs of the coupler. Thus, by measuring the complex ratio of the sum and difference signals, pointing corrections can be generated to instruct the antenna servo system to drive the pointing error to zero. The system achieves its specified performance when the ratio of the signal in the sum channel (that is, the signal from which tracking and telemetry information will be derived) to the noise level in the difference channel is 26 dB-Hz.

2.1.3.4 Ka-Band Aberration Correction

The extremely narrow beamwidth at Ka band requires that a Ka-band uplink signal be aimed at where the spacecraft will be when the signal arrives, while simultaneously receiving a signal that left the spacecraft one one-way light-time previously. This is accomplished by mounting the Ka-band transmit feed at DSS-25 on a movable X-Y platform that can displace the transmitted beam as much as 30 millidegrees from the received beam.

DSS-25 is the only antenna with a Ka-band transmit capability. The fact that the transmit feed is displaced from its optimum focus causes the gain reduction depicted in Figure 50. The equation used to generate this curve is provided in Appendix A.4.

2.1.3.5 X-Band Acquisition

A 1.2-m X-band acquisition antenna and receiver has been installed at the apex (above the subreflector) of the DSS-24, DSS-34, and DSS-54 antennas. The acquisition receiver employs the monopulse technique to develop pointing commands for the antenna during the launch phase when launch time and trajectory uncertainties make predict-driven pointing impractical. During acquisition, the acquisition system is responsible for antenna pointing, however uplink and downlink services are provided by the main antenna beam. The characteristics of the acquisition antennas are given in Table 6 (for DSS-24) and in Table 7 (for DSS-34 and DSS-54).

Section 3
Proposed Capabilities

The DSN is in the process of increasing the number of 34m BWG antennas. Future BWG antennas will be:

DSS-53 (Madrid), 12/2021, (X-up/down, Ka-down)

DSS-23 (Goldstone), 12/2025, (X-up/down, Ka-down)

DSS-33 (Canberra), 9/2028, (X-up/down, Ka-down)

K-band (26 GHz) downlink will be installed in the following antennas:

DSS-26 (Goldstone), 2/2022

DSS-36 (Canberra), 12/2022

250 W K-band uplink will be installed in the following antennas:

DSS-26 (Goldstone), 2/2022

DSS-56 (Madrid), 6/2022

DSS-36 (Goldstone), 12/2022

DSS-34 (Canberra), 6/2023

DSS-54 (Madrid), 12/2023

DSS-24 (Goldstone), 7/2024

800 W Ka-band uplink will be installed in the following antennas:

DSS-35 (Canberra), 8/2026

DSS-55 (Madrid), 5/2027

DSS-25 (Goldstone) 5/2028

DSS-36 and DSS-56 will receive 80 kW X-band uplink at some time in the future, but the dates have not been presently established.

Table 1. Summary of Available Configurations for Each Antenna

ANTENNA		S-UP	S-DOWN	X-UP	X-DOWN	Ka-UP	Ka-DOWN	K-UP/DOWN	OTHER
DEEP SPACE	nominal freq	2115 MHz	2295 MHz	7167.5 MHz	8425 MHz	34450 MHz	32050 MHz	-----	
	band	2110-2120	2290-2300	7145-7190	8400-8450	34.2-34.7 GHz	31.8-32.3 GHz	-----	
NEAR EARTH	nominal freq	2067.5 MHz	2245 MHz	7212.5 MHz	8475 MHz	-----	-----	26250 MHz	
	band	2025-2110 MHz	2200-2290 MHz	7190-7235 MHz	8450-8500 MHz	-----	-----	25.5-27.0 GHz uplink 22.55-23.15 GHz	
ANTENNA		S-UP	S-DOWN	X-UP	X-DOWN	Ka-UP	Ka-DOWN	K-UP/DOWN	OTHER
DSS-23 Goldstone 12/2025	104M Fig. 1	-----	-----	20 kW (DS+NE) (17.4 kW) high power feed	RCP and LCP	-----	RCP and LCP or RCP monopulse	-----	
DSS-24 Goldstone	104M Fig. 2	20 kW DS+NE (17.4 kW)	RCP or LCP	20 kW (DS+NE) (18.2 kW)	RCP or LCP	-----	-----	RCP or LCP 250 W uplink 8/2024	X-band Acq Aid

Table 1. Summary of Available Configurations for Each Antenna (Continued)

ANTENNA		S-UP	S-DOWN	X-UP	X-DOWN	Ka-UP	Ka-DOWN	K-UP/DOWN	OTHER
DSS-25 Goldstone	104M Fig. 3	-----	-----	20 kW (DS+NE) (17.4 kW)	RCP and LCP	300 W (DS) (283 W) LCP only 800 W (DS) (5/2028)	RCP and LCP or RCP monopulse	-----	
DSS-26 Goldstone	104M Fig. 4	250 W NE (200 W)	RCP or LCP	20 kW (DS+NE) (17.4 kW) 80 kW (DS+NE) (67.6 kW) high power feed	RCP and LCP	-----	RCP and LCP or RCP monopulse	RCP or LCP 2/2022 250 W uplink 2/2022	
DSS-33 Canberra 9/2028	104M Fig. 5	-----	-----	20 kW (DS+NE) (17.4 kW) high power feed	RCP and LCP	-----	RCP and LCP or RCP monopulse	-----	

Table 1. Summary of Available Configurations for Each Antenna (Continued)

ANTENNA		S-UP	S-DOWN	X-UP	X-DOWN	Ka-UP	Ka-DOWN	K-UP/DOWN	OTHER
DSS-34 Canberra	104M Fig. 6	20 kW DS+NE (17.4 kW)	RCP or LCP	20 kW (DS+NE) (17.4 kW)	RCP or LCP	-----	RCP and LCP or RCP monopulse	RCP or LCP 250 W uplink 6/2023	X-band Acq Aid
DSS-35 Canberra	104M Fig. 7	-----	-----	20 kW (DS+NE) (17.4 kW) high power feed	RCP and LCP	800 W (DS) (8/2026)	RCP and LCP or RCP monopulse	-----	
DSS-36 Canberra	104M Fig. 8	250 W NE (200 W)	RCP or LCP	20 kW (DS+NE) (17.4 kW) high power feed 80 kW (future)	RCP and LCP	-----	RCP and LCP or RCP monopulse	RCP or LCP 12/2022 250 W uplink 12/2022	
DSS-53 Madrid 12/2021	104M Fig. 9	-----	-----	20 kW (DS+NE) (17.4 kW) high power feed	RCP and LCP	-----	RCP and LCP or RCP monopulse	-----	

Table 1. Summary of Available Configurations for Each Antnna (Continued)

ANTENNA		S-UP	S-DOWN	X-UP	X-DOWN	Ka-UP	Ka-DOWN	K-UP/DOWN	OTHER
DSS-54 Madrid	104M Fig. 10	20 kW NE only (17.4 kW)	RCP or LCP	20 kW (DS+NE) (17.4 kW)	RCP or LCP	-----	RCP and LCP or RCP monopulse	RCP or LCP 250 W uplink 12/2023	X-band Acq Aid
DSS-55 Madrid	104M Fig. 11	-----	-----	20 kW (DS+NE) (17.4 kW)	RCP and LCP	800 W (DS) (5/2027)	RCP and LCP or RCP monopulse	-----	
DSS-56 Madrid	104M Fig. 12	250 W NE (200 W)	RCP or LCP	20 kW (DS+NE) (17.4 kW) high power feed 80 kW (future)	RCP and LCP	-----	RCP and LCP or RCP monopulse	RCP or LCP 250 W uplink 6/2022	

NOTES:
1. DS = deep-space. NE = near-earth.
2. (200 W), (17.4 kW) is power at feedhorn aperture, after transmitter waveguide loss
3. X-band uplink is not available when S-band downlink is required (S/X dichroic in place)
4. Simultaneous X-band RCP and LCP not available at DSS-34 and DSS-54 due to having only a single-channel X-band downconverter, thus RCP “or” LCP.
5. DSS-26, -36, -56 n/a for S-band deep-space uplink due to low transmit power (250 W). DSS-54 n/a for S-band deep-space uplink due to frequency restriction.
6. Simultaneous Ka-band RCP and LCP prevents use of RCP monopulse.
7. Simultaneous K-band RCP and LCP not available due to having only a single K-band downconverter, thus RCP “or” LCP.
8. ORANGE highlight = future antennas. GREEN highlight = low-power S-band transmitters. YELLOW highlight = future Ka-band 800 W transmitters.

Table 2. S-Band Transmit Characteristics, DSS-24, -26, -34, -36, -54, and -56

Parameter	Value	Remarks
ANTENNA		
Gain at 2067.5 MHz (center of near-earth band, 2025-2110 MHz)	55.9 +0.2,–0.3 dBi (DSS-24, -26, -34 ,-36, -54, -56)	At peak of gain versus elevation curve, referenced to feedhorn aperture for matched polarization; no atmosphere included; triangular probability density function (PDF) tolerance.
Gain at 2115 MHz (center of deep-space band, 2110-2120 MHz)	56.2 +0.2,–0.3 dBi (DSS-24, -34 only) (DSS-26, -36, -54, -56 n/a for deep space)	At peak of gain versus elevation curve, referenced to feedhorn aperture for matched polarization; no atmosphere included; triangular probability density function (PDF) tolerance
Transmitter Waveguide Loss	0.6 ±0.1 dB 1.0 ±0.1 dB	20-kW transmitter output terminal (waterload switch) to feedhorn aperture (DSS-24,-34,-54) DSS-26, -36, -56 250-W transmitter
Half-Power Beamwidth	0.263 ±0.020 deg	Angular width (2-sided) between half-power points at specified frequency
Polarization	RCP or LCP	One polarization at a time, remotely selected. Polarization must be the same as received polarization.
Ellipticity	1.0 dB (max)	Peak-to-peak axial ratio defined as the ratio of peak-to-trough received voltages with a rotating linearly polarized source and the feed configured as a circularly (elliptically) polarized receiving antenna.
Pointing Loss		
Angular	See module 302	See also Figure 47.
CONSCAN	0.01 dB	S-band loss using X-band CONSCAN
	0.1 dB	S-band loss using S-band CONSCAN

Table 2. S-Band Transmit Characteristics, DSS-24, -26, -34, -36, -54, and -56 (Continued)

Parameter	Value	Remarks
EXCITER AND TRANSMITTER		
Frequency Range Covered	2025–2120 MHz	Power amplifier is step-tunable over the specified range in six 20-MHz segments, with 5-MHz overlap between segments. Tuning between segments can be accomplished in 30 seconds.
Instantaneous 1-dB bandwidth	20 MHz	
Coherent with near-earth S-band D/L allocation	2028.8–2108.7 MHz	240/221 turnaround ratio
Coherent with deep space S-band D/L channels	2110.2–2117.7 MHz	240/221 turnaround ratio
Coherent with deep space X-band D/L channels	2110.2–2119.8 MHz	880/221 turnaround ratio
RF Power Output		Referenced to transmitter output terminal (waterload switch). Settability is limited to 0.25 dB by measurement equipment precision.
2025–2110 MHz (near-earth band) 2110-2120 MHz (deep-space band)	53.0–73.0 +0.0,-1.0 dBm 54.0 +0.0,-1.0 dBm	DSS-24, -34 (200 W – 20 kW, near-earth and deep-space bands) DSS-54 (200 W − 20 kW, near-earth band only) DSS-26, -36, -56 (250 W, near-earth band only)
Power output varies across the bandwidth and may be as much as 1 dB below nominal rating. Performance will also vary from tube to tube. Normal procedure is to run the tubes saturated, but unsaturated operation is also possible. The point at which saturation is achieved depends on drive power and beam voltage. The 20-kW tubes are normally saturated for power levels greater than 60 dBm (1 kW). Minimum power out of the 20-kW tubes is about 53 dBm (200 W). Efficiency of the tubes drops off rapidly below nominal rated output.		
EIRP (maximum, near-earth band)	128.3 +0.2,–1.0 dBm (DSS-24, -34, -54) 108.9 +0.2,−1.0 dBm (DSS-26, -36, -56)	At gain set elevation angle, referenced to feedhorn aperture
EIRP (maximum, deep-space band)	128.6 +0.2,–1.0 dBm (DSS-24, -34 only)	At gain set elevation angle, referenced to feedhorn aperture. DSS-26, -36, -54, -56 n/a for deep-space.

Table 2. S-Band Transmit Characteristics, DSS-24, -26, -34, -36, -54, and -56 (Continued)

Parameter	Value	Remarks
Tunability		At transmitter output frequency
Phase Continuous Tuning Range	2.0 MHz	
Maximum Tuning Rate	±12.1 kHz/s	
Frequency Error	0.012 Hz	Average over 100 ms with respect to frequency specified by predicts
Ramp Rate Error	0.001 Hz/s	Average over 4.5 s with respect to rate calculated from frequency predicts
Stability		At transmitter output frequency
Output Power Stability		From initial calibration value over 8 hours at a fixed frequency
Saturated Drive	±0.3 dB peak	
Unsaturated Drive	±0.5 dB peak	
Output Power Variation		Across any 600 kHz segment
Saturated Drive	≤0.3 dB p-p	
Unsaturated Drive	≤0.5 dB p-p	
Group Delay Stability	≤ 3.5 ns rms	Ranging modulation signal path (see module 203) over 8 h period
Spurious Output	1–10 Hz -50 dB 10 Hz–1.5 MHz -60 dB 1.5 MHz–8 MHz -45 dB	Below carrier
2nd Harmonic	-85 dB	
3rd Harmonic	–85 dB	
4th Harmonic	–140 dB	At input to X-band horn, with transmitter set for 20-kW output
13th Harmonic		The 13th harmonic of the transmitter lies within the 25.5 – 27.0 GHz allocation for transmitter frequencies from 2025 to 2076.9 MHz and is presently unfiltered – of concern for 20 kW only

Table 3. X-Band Transmit Characteristics, DSS-23, -24, -25, -26, -33, -34, -35, -36, -53, -54, -55, and -56

Parameter	Value	Remarks
ANTENNA		
Gain at 7167.5 MHz (center of 7145-7190 MHz deep-space band) Gain at 7212.5 MHz (center of 7190-7235 MHz near-earth band)	66.98 +0.2,–0.3 dBi 67.03 +0.2,-0.3 dBi	At peak of gain versus elevation angle curve, referenced to feedhorn aperture for matched polarization; no atmosphere included; triangular PDF tolerance.
Transmitter Waveguide Loss		20 kW or 80 kW transmitter output terminal (waterload switch) to feedhorn aperture
DSS-24	0.4 ±0.1 dB	20 kW transmitter
DSS-23, -25, -26, -33, -34, -35, -36, -53, -54, -55, -56	0.6 ±0.1 dB 0.7 ±0.1 dB	20 kW transmitter 80 kW transmitter (DSS-26)
Half-Power Beamwidth	0.077 ±0.004 deg	Angular width (2-sided) between half-power points at specified frequency
Polarization	RCP or LCP	One polarization at a time, remotely selected, independent of received polarization.
Ellipticity	1.0 dB (max)	Peak-to-peak axial ratio. See Table 2 for definition.
Pointing Loss		
Angular	See module 302	See also Figure 48.
CONSCAN	0.1 dB	X-band loss with X-band CONSCAN reference set for 0.1 dB loss
EXCITER AND TRANSMITTER		
Frequency range covered	7145–7235 MHz	S-band downlink is not available with X-band uplink because S/X Dichroic Plate will not pass X-band uplink frequencies.
Coherent with deep space X-band D/L channels	7149.6–7188.9 MHz	880/749 turnaround ratio
Coherent with deep space Ka-band D/L allocation	7149.6–7234.6 MHz	3344/749 turnaround ratio. Note: X-band uplink frequencies greater than 7190 MHz are outside deep space X-band uplink allocation.

Table 3. X-Band Transmit Characteristics, DSS-23, -24, -25, -26, -33, -34, -35, -36, -53, -54, -55, and -56 (Continued)

Parameter	Value	Remarks
RF Power Output		Referenced to 20/80-kW transmitter output terminal (waterload switch). Settability is limited to 0.25 dB by measurement equipment precision.
7145.0–7190.0 MHz	53.0–73.0 ±0.5 dBm	Deep-space uplink allocation, 20 kW xmtr.
7145.0–7190.0 MHz	53.0–79.0 ±0.5 dBm	Deep-space uplink allocation, 80 kW xmtr. (DSS-26 only).
7190.0–7235.0 MHz	53.0–73.0 ±0.5 dBm	Near-earth uplink allocation, 20 kW transmitter.
7190.0–7235.0 MHz	53.0–79.0 ±0.5 dBm	Near-earth uplink allocation, 80 kW transmitter (DSS-26 only).
Power output varies across the bandwidth and may be as much as 1 dB below nominal rating. Performance will also vary from tube to tube. Normal procedure is to run the tubes saturated, but unsaturated operation is also possible. The point at which saturation is achieved depends on drive power and beam voltage. Minimum power out of the 20-kW and 80-kW tubes is about 53 dBm (200 W). Efficiency of the tubes drops off rapidly below nominal rated output.		
EIRP (maximum)		At gain set elevation angle, referenced to feedhorn aperture
DSS-24		
7145.0–7190.0 MHz	139.6 ±0.7 dBm	Deep-space allocation, 20 kW transmitter.
7190.0–7235.0 MHz	139.7 ±0.7 dBm	Near-earth allocation, 20 kW transmitter.
DSS-23, -25, -26, -33, -34, -35, -36, -53, -54, -55, -56		
7145.0–7190.0 MHz	139.4 ±0.7 dBm	Deep-space allocation, 20 kW transmitter.
7145.0–7190.0 MHz	145.2 ±0.7 dBm	Deep-space allocation, 80 kW transmitter (DSS-26 only).
7190.0–7235.0 MHz	139.5 ±0.7 dBm	Near-earth allocation, 20 kW transmitter.
7190.0–7235.0 MHz	145.3 ±0.7 dBm	Near-earth allocation, 80 kW transmitter (DSS-26 only).

Table 3. X-Band Transmit Characteristics, DSS-23, -24, -25, -26, -33, -34, -35, -36, -53, -54, -55, and -56 (Continued)

Parameter	Value	Remarks
Tunability		At transmitter output frequency
Phase Continuous Tuning Range	2.0 MHz	
Maximum Tuning Rate	±12.1 kHz/s	
Frequency Error	0.012 Hz	Average over 100 ms with respect to frequency specified by predicts
Ramp Rate Error	0.001 Hz/s	Average over 4.5 s with respect to rate calculated from frequency predicts
Stability		At transmitter output frequency
Output Power Stability		From initial calibration value over 8 hours at a fixed frequency
Saturated Drive	±0.3 dB peak	
Unsaturated Drive	±0.5 dB peak	
Output Power Variation		Across any 2 MHz segment
Saturated Drive	≤0.3 dB p-p	
Unsaturated Drive	≤0.5 dB p-p	
Group Delay Stability	≤ 1.5 ns rms	Ranging modulation signal path over 8 h period (see module 203)
Spurious Output		Below carrier
1–10 Hz	–50 dB	
10 Hz–1.5 MHz	–60 dB	
1.5 MHz–8 MHz	–45 dB	
2nd Harmonic	–75 dB	
3rd, 4th & 5th Harmonics	–60 dB	

Table 4. Ka-Band Transmit Characteristics, DSS-25

Parameter	Value	Remarks
ANTENNA		
Gain at 34450 MHz		At peak of gain versus elevation angle curve, referenced to feedhorn aperture for matched polarization; no atmosphere included; triangular PDF tolerance.
X/Ka-mode	79.03 +0.2,–0.3 dBi	
Transmitter Waveguide Loss	0.25 ±0.1 dB	300 W transmitter output terminal (waterload switch) to feedhorn aperture
Half-Power Beamwidth	0.016 ±0.001 deg	Angular width (2-sided) between half-power points at specified frequency
Polarization	LCP	RCP is available by changing mechanical configuration of feed
Ellipticity	1.0 dB (max)	Peak-to-peak axial ratio. See Table 2 for definition.
Pointing Loss	0.12 dB	Monopulse aided tracking with minimum required signal level
Angular	See module 302	See also Figure 49 and Figure 50.

Aa

Table 4. Ka-Band Transmit Characteristics, DSS-25 (Continued)

Parameter	Value	Remarks
EXCITER AND TRANSMITTER		
Frequency range covered		
Exciter	34200-34700 MHz	
Transmitter	34315-34415 MHz	
Coherent with deep space Ka-band D/L channels	34317.8-34406.3 MHz	3360/3599 turnaround ratio
Coherent with deep space X-band D/L channels	34354.3-34409.8 MHz	880/3599 turnaround ratio
RF Power Output	47.0–54.8 ±0.5 dBm 59.0 dBm	Referenced to 300 W transmitter output terminal (transmitter RF drawer rear panel flange). Settability is limited to 0.25 dB by measurement equipment precision. 800 W transmitter (DSS-25 in 5/2028, DSS-35 in 8/2026, DSS-55 in 5/2027)
Minimum power output is about 47 dBm (50 W) and may operate unsaturated.		
EIRP (maximum)	133.6 +0.6, -0.5 dBm	At gain set elevation angle, referenced to feedhorn aperture
Output Power Variation	≤ ±1.0 dB	Across frequency band over 8 hours
Spurious Output		Below carrier
1–10 Hz	–50 dB	
10 Hz–1.5 MHz	–60 dB	

Table 5. S- and K-Band Receive Characteristics, DSS-24, -26, -34, -36, -54, and -56

Parameter	Value	Remarks
ANTENNA		
Gain		At peak of gain versus elevation angle curve, referenced to feedhorn aperture (feed and feedline losses are accounted for in system temperature), for matched polarization; no atmosphere included; triangular PDF tolerance. See Figure 13 and Figures 21 – 23 for representative gain versus elevation curves.
S-band (2295 MHz)	56.74 +0.1,–0.2 dBi	
K-band (26250 MHz)	77.2 +0.0,–0.2 dBi	Available at DSS-26 in 2/2022 and at DSS-36 in 12/2022.
Half-Power Beamwidth		Angular width (2-sided) between half-power points at specified frequency
S-band	0.242 ±0.020 deg	
K-band	0.021 ±0.002 deg	
Polarization	RCP or LCP	Remotely selected. S-band must be same as transmit polarization
Ellipticity	≤1.0 dB	Peak-to-peak voltage axial ratio, RCP and LCP. See definition in Table 2.
Pointing Loss		
Angular	See module 302	See also Figure 47 and Figure 49.
CONSCAN	0.1 dB	Recommended value for S-, X, or K-band tracking
S-BAND RECEIVER		
Frequency Range Covered	2200–2300 MHz	
Recommended Maximum Signal Power	-85.0 dBm	At HEMT input terminal
Antenna-Microwave Noise Temperature (T_{AMW})		Near zenith, no atmosphere or cosmic noise included. See Table 9 and Figure 30. Favorable (–) and adverse (+) tolerances have triangular PDF.
Non-Diplexed Path		Referenced to feedhorn aperture. LNA = HEMT-1
DSS-24	26.10 –1.0,+2.0 K	
DSS-26	17.60 –1.0,+2.0 K	
DSS-34	24.88 –1.0,+2.0 K	
DSS-36	21.57 –1.0,+2.0 K	
DSS-54	25.73 –1.0,+2.0 K	

Table 5. S- and K-Band Receive Characteristics, DSS-24, -26, -34, -36, -54, and -56 (Continued)

Parameter	Value	Remarks
S-BAND RECEIVER (Continued)		
DSS-56	20.63 –1.0,+2.0 K	
Diplexed Path	Add 8.00 K to above	DSS-24, -26, -34, -36, -54, -56
K-BAND RECEIVER		
Frequency Range Covered	25500–27000 MHz	
Recommended Maximum Signal Power		At HEMT input terminal
Normal Mode	–85.0 dBm	
Low-gain Mode	–65.0 dBm	For high received power levels
Antenna-Microwave Noise Temperature (T_{AMW})		RCP/LCP average at 26000 MHz. Referenced to feedhorn aperture. See Table 9 and Figures 38-40.
DSS-24 K-only mode	20.7 –1.0,+3.0 K	
DSS-24 S/K-mode	26.5 –1.0,+3.0 K	
DSS-26 K-only mode	Not presently available	Available in 2/2022
DSS-26 S/K mode	Not presently available	Available in 2/2022
DSS-34 K-only mode	25.6 –1.0,+3.0 K	
DSS-34 S/K-mode	31.4 –1.0,+3.0 K	
DSS-36 K-only mode	Not presently available	Available in 12/2022
DSS-36 S/K mode	Not presently available	Available in 12/2022
DSS-54 K-only mode	28.8 –1.0,+3.0 K	
DSS-54 S/K-mode	34.6 –1.0,+3.0 K	
DSS-56 K-only mode	33.8 –1.0,+3.0 K	
DSS-56 S/K-mode	39.6 –1.0,+3.0 K	
Low-Gain Mode		Required for signal levels in excess of –85.0 dBm
K-only (All Stations)	156 –11.0,+33.0 K	
S/K-only (All Stations)	185 –11.0,+33.0 K	
Tunability	1 Hz resolution	
Carrier Tracking Loop Noise B/W	0.1% of symbol rate	Effective one-sided, noise-equivalent carrier loop bandwidth (B_L)
Symbol Loop Acquisition B/W	0.3% of symbol rate	

Table 6. X-Band Receive Characteristics, DSS-24

Parameter	Value	Remarks
MAIN ANTENNA		
Gain (8425 MHz)		At peak of gain versus elevation angle curve, referenced to feedhorn aperture (feed and feedline losses are accounted for in system temperature), for matched polarization; no atmosphere included; triangular PDF tolerance.
X-only Mode	68.24 +0.1,–0.2 dBi	S/X and S/K dichroic plates retracted.
S/X Mode	68.19 +0.1,–0.2 dBi	S/X dichroic plate extended.
Half-Power Beamwidth	0.066 ±0.004 deg	Angular width (2-sided) between half-power points at specified frequency
Polarization	RCP or LCP	Remotely Selected. Same as or opposite from transmit polarization
Ellipticity	≤0.7 dB	Peak-to-peak voltage axial ratio, RCP and LCP. See definition in Table 2.
Pointing Loss		
Angular	See module 302	See also Figure 48.
CONSCAN	0.1 dB	Recommended value when using X-band CONSCAN reference
RECEIVER		
Frequency Range Covered	8400–8500 MHz	
Recommended Maximum Signal Power	-90.0 dBm	At maser input terminal
Antenna-Microwave Noise Temperature (T_{AMW})	Low-gain mode add +20 K to values below	Near zenith, no atmosphere or cosmic noise included. See Table 9. Favorable (–) and adverse (+) tolerances have triangular PDF.
Non-Diplexed Path (8400–8500 MHz) LNA = MASER-1	21.28 –1.0,+2.0 K	X-band-only operation (S/X-band dichroic plate retracted). Referenced to feedhorn aperture.
Diplexed Path (8400–8500 MHz) LNA = MASER-1	30.39 –1.0,+2.0 K	X-band-only operation (S/X-band dichroic plate retracted). Referenced to feedhorn aperture.
Non-Diplexed Path (8400–8500 MHz) LNA = MASER-1	22.72 –1.0,+2.0 K	S/X-band operation (S/X-band dichroic plate extended). Referenced to feedhorn aperture.
Diplexed Path (8400–8500 MHz) LNA = MASER-1	31.89 –1.0,+2.0 K	S/X-band operation (S/X-band dichroic plate extended). Referenced to feedhorn aperture.
Tunability	Continuous	
Carrier Tracking Loop Noise B/W (Hz)	0.25 – 200	Effective one-sided, noise-equivalent carrier loop bandwidth (B_L)

Table 6. X-Band Receive Characteristics, DSS-24 (Continued)

Parameter	Value	Remarks
ACQUISITION ANTENNA AND RECEIVER – DSS-24		
Gain (8425 MHz)	38.0 ±0.5 dB	Referenced to acquisition downconverter input terminals (includes feedline losses)
Half-Power Beamwidth	2.1 deg	Angular width (2-sided) between half-power points at specified frequency
Polarization	RCP	LCP is available by manual selection at feed
Frequency Range Covered	8400–8500 MHz	
System Temperature	280 ±30K.	Near Zenith
Tracking Bandwidths		Two-sided bandwidths
Residual Carrier	4 kHz	
Frequency Acquisition	±150 kHz	
Doppler Tracking	±400 kHz	
Suppressed Carrier	280 kHz	Open-loop operation
Tunability	1 kHz resolution	
Signal Acquisition Range		
Residual Carrier	–90 to –135 dBm	
Suppressed Carrier	–90 to –119 dBm.	

Table 7. X- and Ka-Band Receive Characteristics, DSS-23, -25, -26, -33, -34, -35, -36, -53, -54, -55, and -56

Parameter	Value	Remarks
MAIN ANTENNA		
Gain		At peak of gain versus elevation angle curve, referenced to feedhorn aperture (feed and feedline losses are accounted for in system temperature), for matched polarization; no atmosphere included; triangular PDF tolerance. See Figures 14 – 20 and Figures 24 – 29 for representative gain versus elevation curves.
X-band (8425 MHz)	68.27 +0.1,–0.2 dBi	DSS-26, -34, -36, -54, -56, S/X-band operation (S/X dichroic plate extended). DSS-23, -25, -33, -35, -53, -55 do not have S-band capability.
X-band (8425 MHz)	68.32 +0.1,–0.2 dBi	DSS-23, -25, -26, -33, -34, -35, -36, -53, -54, -55, -56, X/Ka-band operation (S/X dichroic plate retracted).
Ka-band (32050 MHz)	79.0 +0.3,–0.3 dBi	DSS-23, -25, -26, -33, -34, -35, -36, -53, -54, -55, -56, X/Ka-band operation (S/X dichroic plate retracted)
Half-Power Beamwidth		Angular width (2-sided) between half-power points at specified frequency
X-band	0.066 ±0.004 deg	
Ka-band	0.017 ±0.002 deg	
Polarization		
X-band DSS-23, -25, -26, -33, -35, -36, -53, -55, -56	RCP and LCP	Simultaneously
X-band DSS-24, -34, -54	RCP or LCP	Remotely selected. Independent of transmit polarization. Only one X-band downconverter at DSS-34/-54, thus “or”.
Ka-band DSS-23, -25, -26, -33, -34, -35, -36, -53, -54, -55, & -56	RCP and LCP	Monopulse is available only at RCP.
Ellipticity		Peak-to-peak voltage axial ratio. See definition in Table 2.
X-band	≤0.7 dB	RCP and LCP
Ka-band	≤1.0 dB	
Pointing Loss		
Angular	See module 302	See also Figures 48 and 49.
CONSCAN		
X-band	0.1 dB	Recommended value when using X-band CONSCAN

Table 7. X- and Ka-Band Receive Characteristics, DSS-23, -25, -26, -33, -34, -35, -36, -53, -54, -55, and -56 (Continued)

Parameter	Value	Remarks
Ka-band	0.1 dB	Recommended value when using Ka-band CONSCAN if monopulse not available or for dual-polarization Ka-band reception.
Monopulse		
X-band	0.007 dB	Using Ka-band monopulse reference
Ka-band	0.11 dB	Sum channel signal to error channel noise ratio ≥ 26 dB-Hz
RECEIVER		
Frequency Ranges		
X-band	8200-8600 MHz	General frequency range. Specific antenna bandwidth restrictions listed below.
Ka-band	31800–32300 MHz	Tracking receiver covers bandwidth with 5 overlapping bands of □ 160 MHz
Recommended Maximum Signal Power	-85.0 dBm -65.0 dBm	At HEMT input terminal (DSS-23, -25, -26, -33, -34, -35, -36, -53, -54, -55, -56) At HEMT input terminal (DSS-23, -25, -26, -33, -34, -35, -36, -53, -54, -55, -56) for high received power level in low-gain mode.
Antenna-Microwave Noise Temperature (T_{AMW})	Low-gain mode add +20 K for X-band, +70 K for Ka-band, to values below	Near zenith, no atmosphere or cosmic noise included. See Table 9. See Figures 31–37 and Figures 41–46 for representative system temperature versus elevation curves. Favorable (–) and adverse (+) tolerances have triangular PDF.
X-band (8200–8600 MHz)		DSS-23,-25,-26,-33,-34,-35,-36,-53,-54,-55,-56 with always-diplexed dual-HEMT X/X/Ka feed. With or without transmitter operating. Referenced to feedhorn aperture.
DSS-23 (RCP)	TBD	X/Ka-mode, LNA = HEMT-1
DSS-23 (RCP)	TBD	X/Ka-mode, LNA = HEMT 2
DSS-25 (RCP)	16.2 –1.0,+2.0 K	X/Ka-mode, LNA = HEMT-1
DSS-25 (LCP)	16.0 –1.0,+2.0 K	X/Ka-mode, LNA = HEMT-2
DSS-26 (RCP)	16.29 –1.0,+2.0 K	X/Ka-mode, LNA = HEMT-1
DSS-26 (LCP)	15.43 –1.0,+2.0 K	X/Ka-mode, LNA = HEMT-2
DSS-26 (RCP)	18.01 –1.0,+2.0 K	S/X-mode, LNA = HEMT-1
DSS-26 (LCP)	17.15 –1.0,+2.0 K	S/X-mode, LNA = HEMT-2
DSS-33 (RCP)	TBD	X/Ka-mode, LNA = HEMT-1
DSS-33 (LCP)	TBD	X/Ka-mode, LNA = HEMT-2
DSS-34 (RCP)	16.28 –1.0,+2.0 K	X/Ka-mode, LNA = HEMT-1

Table 7. X- and Ka-Band Receive Characteristics, DSS-23, -25, -26, -33, -34, -35, -36, -53, -54, -55, and -56 (Continued)

Parameter	Value	Remarks
DSS-34 (LCP)	16.71 –1.0,+2.0 K	X/Ka-mode, LNA = HEMT-2
DSS-34 (RCP)	17.99 –1.0,+2.0 K	S/X-mode, LNA = HEMT-1
DSS-34 (LCP)	18.43 –1.0,+2.0 K	S/X-mode, LNA = HEMT-2
DSS-35 (RCP)	14.7 –1.0,+2.0 K	X/Ka-mode, LNA = HEMT-1
DSS-35 (LCP)	15.0 –1.0,+2.0 K	X/Ka-mode, LNA = HEMT-2
DSS-36 (RCP)	12.59 –1.0,+2.0 K	X/Ka-mode, LNA = HEMT-1
DSS-36 (LCP)	13.95 –1.0,+2.0 K	X/Ka-mode, LNA = HEMT-2
DSS-36 (RCP)	14.31 –1.0,+2.0 K	S/X-mode, LNA = HEMT-1
DSS-36 (LCP)	15.67 –1.0,+2.0 K	S/X-mode, LNA = HEMT-2
DSS-53 (RCP)	TBD	X/Ka-mode, LNA = HEMT-1
DSS-53 (LCP)	TBD	X/Ka-mode, LNA = HEMT-2
DSS-54 (RCP)	18.31 –1.0,+2.0 K	X/Ka-mode, LNA = HEMT-1
DSS-54 (LCP)	18.31 –1.0,+2.0 K	X/Ka-mode, LNA = HEMT-2
DSS-54 (RCP)	20.03 –1.0,+2.0 K	S/X-mode, LNA = HEMT-1
DSS-54 (LCP)	20.03 –1.0,+2.0 K	S/X-mode, LNA = HEMT-2
DSS-55 (RCP)	17.42 –1.0,+2.0 K	X/Ka-mode, LNA = HEMT-1
DSS-55 (LCP)	17.82 –1.0,+2.0 K	X/Ka-mode, LNA = HEMT-2
DSS-56 (RCP)	14.47 –1.0,+2.0 K	X/Ka-mode, LNA = HEMT-1
DSS-56 (LCP)	13.96 –1.0,+2.0 K	X/Ka-mode, LNA = HEMT-2
DSS-56 (RCP)	16.19 –1.0,+2.0 K	S/X-mode, LNA = HEMT-1
DSS-56 (LCP)	15.68 –1.0,+2.0 K	S/X-mode, LNA = HEMT-2
Ka-band (31800–32300 MHz)		X/Ka-band operation referenced to feedhorn aperture,
DSS-23 (RCP)	TBD	LNA = HEMT-1
DSS-23 (RCP Error)	TBD	LNA = HEMT-2
DSS-23 (LCP)	TBD	LNA = HEMT-3
DSS-25 (RCP)	24.2 –1.0,+2.0 K	LNA = HEMT-1
DSS-25 (RCP Error)	25.7 –1.0,+2.0 K	LNA = HEMT-2
DSS-25 (LCP)	23.0 –1.0,+2.0 K	LNA = HEMT-3
DSS-26 (RCP)	19.36 –1.0,+2.0 K	LNA = HEMT-1
DSS-26 (RCP Error)	24.55 –1.0,+2.0 K	LNA = HEMT-2
DSS-26 (LCP)	20.77 –1.0,+2.0 K	LNA = HEMT-3
DSS-33 (RCP)	TBD	LNA = HEMT-1
DSS-33 (RCP Error)	TBD	LNA = HEMT-2
DSS-33 (LCP)	TBD	LNA = HEMT-3
DSS-34 (RCP)	19.38 –1.0,+2.0 K	LNA = HEMT-1

Table 7. X- and Ka-Band Receive Characteristics, DSS-25, -26, -34, -35, -36, -53, -54, -55, and -56 (Continued)

Parameter	Value	Remarks
DSS-34 (RCP Error)	23.25 –1.0,+2.0 K	LNA = HEMT-2
DSS-34 (LCP)	19.61 –1.0,+2.0 K	LNA = HEMT-3
DSS-35 (RCP)	17.3 –1.0,+2.0 K	LNA = HEMT-1
DSS-35 (RCP Error)	TBD	LNA = HEMT-2
DSS-35 (LCP)	17.2 –1.0,+2.0 K	LNA = HEMT-3
DSS-36 (RCP)	12.54 –1.0,+2.0 K	LNA = HEMT-1
DSS-36 (RCP Error)	TBD	LNA = HEMT-2
DSS-36 (LCP)	12.18 –1.0,+2.0 K	LNA = HEMT-3
DSS-53 (RCP)	TBD	LNA = HEMT-1
DSS-53 (RCP Error)	TBD	LNA = HEMT-2
DSS-53 (LCP)	TBD	LNA = HEMT-3
DSS-54 (RCP)	21.80 –1.0,+2.0 K	LNA = HEMT-1
DSS-54 (RCP Error)	25.00 –1.0,+2.0 K	LNA = HEMT-2
DSS-54 (LCP)	21.80 –1.0,+2.0 K	LNA = HEMT-3
DSS-55 (RCP)	20.80 –1.0,+2.0 K	LNA = HEMT-1
DSS-55 (RCP Error)	21.98 –1.0,+2.0 K	LNA = HEMT-2
DSS-55 (LCP)	19.83 –1.0,+2.0 K	LNA = HEMT-3
DSS-56 (RCP)	16.5 –1.0,+2.0 K	LNA = HEMT-1
DSS-56 (RCP Error)	TBD	LNA = HEMT-2
DSS-56 (LCP	17.0 –1.0,+2.0 K	LNA = HEMT-3
Carrier Tracking Loop Noise B/W	0.25 – 200 Hz	Effective one-sided, noise-equivalent carrier loop bandwidth (B_L). See module 202

Table 7. X- and Ka-Band Receive Characteristics, DSS-25, -26, -34, -35, -36, -53, -54, -55, and -56 (Continued)

Parameter	Value	Remarks
ACQUISITION ANTENNA AND RECEIVER – DSS-34 AND DSS-54		
Gain (8425 MHz)	38.0 ±0.5 dB	Referenced to acquisition downconverter input terminals (includes feedline losses)
Half-Power Beamwidth	2.1 deg	Angular width (2-sided) between half-power points at specified frequency
Polarization	RCP	LCP is available by manual selection at feed
Frequency Range Covered	8400–8500 MHz	
System Temperature	280 ±30K.	Near Zenith
Tracking Bandwidths		Two-sided bandwidths
Residual Carrier	4 kHz	
Frequency Acquisition	±150 kHz	
Doppler Tracking	±400 kHz	
Suppressed Carrier	280 kHz	Open-loop operation
Tunability	1 kHz resolution	
Signal Acquisition Range		
Residual Carrier	–90 to –135 dBm	
Suppressed Carrier	–90 to –119 dBm.	

Table 8. Gain Reduction Due to Wind Effects on Structural Deformation and Pointing Error

Wind Speed		Gain Reduction (dB)*			
(km/hr)	(mph)	S-Band	X-Band	K-Band	Ka-Band
10	6	negligible	negligible	0.02	0.03
30	18	negligible	0.02	0.19	0.29
50	30	negligible	0.06	0.53	0.80

***** Maximum total combined effects of structural deformation and pointing error at various wind speeds.

Table 9. T_{AMW}, T_{sky}, and T_{op} for CD=25% Average Clear Weather at Zenith, Referenced to Feedhorn Aperture

Frequency, Station, and Configuration	Noise Temperatures, K		
	T_{AMW}	T_{sky}	T_{op}
S-band, DSS-24, S/X or S/K, HEMT-1, RCP or LCP, non-diplexed	26.10	4.68	30.78
S-band, DSS-24, S/X or S/K, HEMT-1, RCP or LCP, diplexed	33.47	4.68	38.15
S-band, DSS-26, S/X or S/K, HEMT-1, RCP or LCP, non-diplexed	17.6	4.68	22.3
S-band, DSS-26, S/X or S/K, HEMT-1, RCP or LCP, diplexed	23.4	4.68	28.1
S-band, DSS-34, S/X or S/K, HEMT-1, RCP or LCP, non-diplexed	24.88	4.86	29.74
S-band, DSS-34, S/X or S/K, HEMT-1, RCP or LCP, diplexed	34.46	4.86	39.32
S-band, DSS-36, S/X or S/K, HEMT-1, RCP or LCP, non-diplexed	21.57	4.86	26.43
S-band, DSS-36, S/X or S/K, HEMT-1, RCP or LCP, diplexed	30.43	4.86	35.29
S-band, DSS-54, S/X or S/K, HEMT-1, RCP or LCP, non-diplexed	25.73	4.80	30.53
S-band, DSS-54, S/X or S/K, HEMT-1, RCP or LCP, diplexed	35.35	4.80	40.15
S-band, DSS-56, S/X or S/K, HEMT-1, RCP or LCP, non-diplexed	20.63	4.80	25.43
S-band, DSS-56, S/X or S/K, HEMT-1, RCP or LCP, diplexed	27.33	4.80	32.13
X-band, DSS-23, X/Ka, HEMT-1, RCP, diplexed	TBD	5.04	TBD
X-band, DSS-23, X/Ka, HEMT-2, LCP, diplexed	TBD	5.04	TBD
X-band, DSS-24, X-only, MASER-1, RCP or LCP, non-diplexed	21.28	5.04	26.32
X-band, DSS-24, X-only, MASER-1, RCP or LCP, diplexed	30.39	5.04	35.43
X-band, DSS-24, S/X, MASER-1, RCP or LCP, non-diplexed	22.72	5.04	27.76
X-band, DSS-24, S/X, MASER-1, RCP or LCP, diplexed	31.89	5.04	36.93
X-band, DSS-25, X/Ka, HEMT-1, RCP, diplexed	16.2	5.04	21.2
X-band, DSS-25, X/Ka, HEMT-2, LCP, diplexed	16.0	5.04	21.0
X-band, DSS-26, X/Ka, HEMT-1, RCP, diplexed	16.29	5.04	21.33
X-band, DSS-26, X/Ka, HEMT-2, LCP, diplexed	15.43	5.04	20.47
X-band, DSS-26, S/X, HEMT-1, RCP, diplexed	18.01	5.04	23.05
X-band, DSS-26, S/X, HEMT-2, LCP, diplexed	17.15	5.04	22.19
X-band, DSS-33, X/Ka, HEMT-1, RCP, diplexed	TBD	5.39	TBD
X-band, DSS-33, X/Ka, HEMT-2, LCP, diplexed	TBD	5.39	TBD
X-band, DSS-34, X/Ka, HEMT-1, RCP, diplexed	16.28	5.39	21.67
X-band, DSS-34, X/Ka, HEMT-2, LCP, diplexed	16.71	5.39	22.10
X-band, DSS-34, S/X, HEMT-1, RCP, diplexed	17.99	5.39	23.38
X-band, DSS-34, S/X, HEMT-2, LCP, diplexed	18.43	5.39	23.82
X-band, DSS-35, X/Ka, HEMT-1, RCP, diplexed	14.7	5.39	20.09
X-band, DSS-35, X/Ka, HEMT-2, LCP, diplexed	15.0	5.39	20.45
X-band, DSS-36, X/Ka, HEMT-1, RCP, diplexed	12.59	5.39	17.98
X-band, DSS-36, X/Ka, HEMT-2, LCP, diplexed	13.95	5.39	19.34
X-band, DSS-36, S/X, HEMT-1, RCP, diplexed	14.31	5.39	19.70
X-band, DSS-36, S/X, HEMT-2, LCP, diplexed	15.67	5.39	21.06

Table 9. T_{AMW}, T_{sky}, and T_{op} for CD=25% Average Clear Weather at Zenith, Referenced to Feedhorn Aperture (Continued)

Frequency, Station, and Configuration	Noise Temperatures, K		
	T_{AMW}	T_{sky}	T_{op}
X-band, DSS-53, X/Ka, HEMT-1, RCP, diplexed	TBD	5.27	TBD
X-band, DSS-53, X/Ka, HEMT-2, LCP, diplexed	TBD	5.27	TBD
X-band, DSS-54, X/Ka, HEMT-1, RCP, diplexed	18.31	5.27	23.58
X-band, DSS-54, X/Ka, HEMT-2, LCP, diplexed	18.31	5.27	23.58
X-band, DSS-54, S/X, HEMT-1, RCP, diplexed	20.03	5.27	25.30
X-band, DSS-54, S/X, HEMT-2, LCP, diplexed	20.03	5.27	25.30
X-band, DSS-55, X/Ka, HEMT-1, RCP, diplexed	17.42	5.27	22.69
X-band, DSS-55, X/Ka, HEMT-2, LCP, diplexed	17.82	5.27	23.09
X-band, DSS-54, X/Ka, HEMT-1, RCP, diplexed	14.47	5.27	19.74
X-band, DSS-54, X/Ka, HEMT-2, LCP, diplexed	13.96	5.27	19.23
X-band, DSS-54, S/X, HEMT-1, RCP, diplexed	16.19	5.27	21.46
X-band, DSS-54, S/X, HEMT-2, LCP, diplexed	15.68	5.27	20.95
K-band, DSS-24, K-only, HEMT-1, RCP, non-diplexed, 25.5 GHz	19.8	10.3	30.1
K-band, DSS-24, K-only, HEMT-2, LCP, non-diplexed, 25.5 GHz	27.3	10.3	37.6
K-band, DSS-24, S/K, HEMT-1, RCP, non-diplexed, 25.5 GHz	30.4	10.3	40.7
K-band, DSS-24, S/K, HEMT-2, LCP, non-diplexed, 25.5 GHz	37.9	10.3	48.2
K-band, DSS-24, K-only, HEMT-1, RCP, non-diplexed, 26.0 GHz	17.7	10.1	27.8
K-band, DSS-24, K-only, HEMT-2, LCP, non-diplexed, 26.0 GHz	23.7	10.1	33.8
K-band, DSS-24, S/K, HEMT-1, RCP, non-diplexed, 26.0 GHz	23.6	10.1	33.7
K-band, DSS-24, S/K, HEMT-2, LCP, non-diplexed, 26.0 GHz	29.6	10.1	39.7
K-band, DSS-24, K-only, HEMT-1, RCP, non-diplexed, 27.0 GHz	21.0	10.1	31.1
K-band, DSS-24, K-only, HEMT-2, LCP, non-diplexed, 27.0 GHz	25.6	10.1	35.7
K-band, DSS-24, S/K, HEMT-1, RCP, non-diplexed, 27.0 GHz	30.6	10.1	40.7
K-band, DSS-24, S/K, HEMT-2, LCP, non-diplexed, 27.0 GHz	35.2	10.1	45.3
K-band, DSS-26, K-only, HEMT-1, RCP, non-diplexed, 26.0 GHz	TBD	10.1	TBD
K-band, DSS-26, K-only, HEMT-2, LCP, non-diplexed, 26.0 GHz	TBD	10.1	TBD
K-band, DSS-26, S/K, HEMT-1, RCP, non-diplexed, 26.0 GHz	TBD	10.1	TBD
K-band, DSS-26, S/K, HEMT-2, LCP, non-diplexed, 26.0 GHz	TBD	10.1	TBD
K-band, DSS-34, K-only, HEMT-1, RCP, non-diplexed, 25.5 GHz	25.1	13.3	38.4
K-band, DSS-34, K-only, HEMT-2, LCP, non-diplexed, 25.5 GHz	26.5	13.3	39.8
K-band, DSS-34, S/K, HEMT-1, RCP, non-diplexed, 25.5 GHz	35.7	13.3	49.0
K-band, DSS-34, S/K, HEMT-2, LCP, non-diplexed, 25.5 GHz	37.1	13.3	50.4
K-band, DSS-34, K-only, HEMT-1, RCP, non-diplexed, 26.0 GHz	25.5	13.0	38.5
K-band, DSS-34, K-only, HEMT-2, LCP, non-diplexed, 26.0 GHz	25.6	13.0	38.6
K-band, DSS-34, S/K, HEMT-1, RCP, non-diplexed, 26.0 GHz	31.4	13.0	44.4

Table 9. T_{AMW}, T_{sky}, and T_{op} for CD=25% Average Clear Weather at Zenith, Referenced to Feedhorn Aperture (Continued)

Frequency, Station, and Configuration	Noise Temperatures, K		
	T_{AMW}	T_{sky}	T_{op}
K-band, DSS-34, S/K, HEMT-2, LCP, non-diplexed, 26.0 GHz	31.5	13.0	44.5
K-band, DSS-34, K-only, HEMT-1, RCP, non-diplexed, 27.0 GHz	23.9	12.8	36.7
K-band, DSS-34, K-only, HEMT-2, LCP, non-diplexed, 27.0 GHz	24.7	12.8	37.5
K-band, DSS-34, S/K, HEMT-1, RCP, non-diplexed, 27.0 GHz	33.5	12.8	46.3
K-band, DSS-34, S/K, HEMT-2, LCP, non-diplexed, 27.0 GHz	34.3	12.8	47.1
K-band, DSS-36, K-only, HEMT-1, RCP, non-diplexed, 26.0 GHz	TBD	13.0	TBD
K-band, DSS-36, K-only, HEMT-2, LCP, non-diplexed, 26.0 GHz	TBD	13.0	TBD
K-band, DSS-36, S/K, HEMT-1, RCP, non-diplexed, 26.0 GHz	TBD	13.0	TBD
K-band, DSS-36, S/K, HEMT-2, LCP, non-diplexed, 26.0 GHz	TBD	13.0	TBD
K-band, DSS-54, K-only, HEMT-1, RCP, non-diplexed, 25.5 GHz	28.4	11.9	40.3
K-band, DSS-54, K-only, HEMT-2, LCP, non-diplexed, 25.5 GHz	30.9	11.9	42.8
K-band, DSS-54, S/K, HEMT-1, RCP, non-diplexed, 25.5 GHz	39.0	11.9	50.9
K-band, DSS-54, S/K, HEMT-2, LCP, non-diplexed, 25.5 GHz	41.5	11.9	53.4
K-band, DSS-54, K-only, HEMT-1, RCP, non-diplexed, 26.0 GHz	28.3	11.7	40.0
K-band, DSS-54, K-only, HEMT-2, LCP, non-diplexed, 26.0 GHz	29.2	11.7	40.9
K-band, DSS-54, S/K, HEMT-1, RCP, non-diplexed, 26.0 GHz	34.2	11.7	45.9
K-band, DSS-54, S/K, HEMT-2, LCP, non-diplexed, 26.0 GHz	35.1	11.7	46.8
K-band, DSS-54, K-only, HEMT-1, RCP, non-diplexed, 27.0 GHz	26.9	11.6	38.5
K-band, DSS-54, K-only, HEMT-2, LCP, non-diplexed, 27.0 GHz	26.8	11.6	38.4
K-band, DSS-54, S/K, HEMT-1, RCP, non-diplexed, 27.0 GHz	36.5	11.6	48.1
K-band, DSS-54, S/K, HEMT-2, LCP, non-diplexed, 27.0 GHz	36.4	11.6	48.0
K-band, DSS-56, K-only, HEMT-1, RCP, non-diplexed, 26.15 GHz	33.8	11.7	45.5
K-band, DSS-56, K-only, HEMT-2, LCP, non-diplexed, 26.15 GHz	33.8	11.7	45.5
K-band, DSS-56, S/K, HEMT-1, RCP, non-diplexed, 26.15 GHz	39.8	11.7	51.5
K-band, DSS-56, S/K, HEMT-2, LCP, non-diplexed, 26.15 GHz	39.8	11.7	51.5
Ka-band, DSS-23, X/Ka, HEMT-1, RCP, non-diplexed	TBD	11.50	TBD
Ka-band, DSS-23, X/Ka, HEMT-2, RCP-error, non-diplexed	TBD	11.50	TBD
Ka-band, DSS-23, X/Ka, HEMT-3, LCP, non-diplexed	TBD	11.50	TBD
Ka-band, DSS-25, X/Ka, HEMT-1, RCP, diplexed	24.2	11.50	35.70
Ka-band, DSS-25, X/Ka, HEMT-2, RCP-error, diplexed	25.7	11.50	37.20
Ka-band, DSS-25, X/Ka, HEMT-3, LCP, diplexed	23.0	11.50	34.50
Ka-band, DSS-26, X/Ka, HEMT-1, RCP, non-diplexed	19.36	11.50	30.86
Ka-band, DSS-26, X/Ka, HEMT-2, RCP-error, non-diplexed	24.55	11.50	36.05
Ka-band, DSS-26, X/Ka, HEMT-3, LCP, non-diplexed	20.77	11.50	32.27
Ka-band, DSS-33, X/Ka, HEMT-1, RCP, non-diplexed	TBD	14.81	TBD

Table 9. T_{AMW}, T_{sky}, and T_{op} for CD=25% Average Clear Weather at Zenith, Referenced to Feedhorn Aperture (Continued)

Frequency, Station, and Configuration	Noise Temperatures, K		
	T_{AMW}	T_{sky}	T_{op}
Ka-band, DSS-33, X/Ka, HEMT-2, RCP-error, non-diplexed	TBD	14.81	TBD
Ka-band, DSS-33, X/Ka, HEMT-3, LCP, non-diplexed	TBD	14.81	TBD
Ka-band, DSS-34, X/Ka, HEMT-1, RCP, non-diplexed	19.38	14.81	34.19
Ka-band, DSS-34, X/Ka, HEMT-2, RCP-error, non-diplexed	23.25	14.81	38.06
Ka-band, DSS-34, X/Ka, HEMT-3, LCP, non-diplexed	19.61	14.81	34.42
Ka-band, DSS-35, X/Ka, HEMT-1, RCP, diplexed (8/2026)	17.3	14.81	32.11
Ka-band, DSS-35, X/Ka, HEMT-2, RCP-error, diplexed (8/2026)	TBD	14.81	TBD
Ka-band, DSS-35, X/Ka, HEMT-3, LCP, diplexed (8/2026)	17.2	14.81	32.01
Ka-band, DSS-36, X/Ka, HEMT-1, RCP, non-diplexed	12.54	14.81	27.35
Ka-band, DSS-36, X/Ka, HEMT-2, RCP-error, non-diplexed	TBD	14.81	TBD
Ka-band, DSS-36, X/Ka, HEMT-3, LCP, non-diplexed	12.18	14.81	26.99
Ka-band, DSS-53, X/Ka, HEMT-1, RCP, non-diplexed	TBD	13.91	TBD
Ka-band, DSS-53, X/Ka, HEMT-2, RCP-error, non-diplexed	TBD	13.91	TBD
Ka-band, DSS-53, X/Ka, HEMT-3, LCP, non-diplexed	TBD	13.91	TBD
Ka-band, DSS-54, X/Ka, HEMT-1, RCP, non-diplexed	21.80	13.91	35.71
Ka-band, DSS-54, X/Ka, HEMT-2, RCP-error, non-diplexed	25.00	13.91	38.91
Ka-band, DSS-54, X/Ka, HEMT-3, LCP, non-diplexed	21.80	13.91	35.71
Ka-band, DSS-55, X/Ka, HEMT-1, RCP, diplexed (5/2027)	20.80	13.91	34.71
Ka-band, DSS-55, X/Ka, HEMT-2, RCP-error, diplexed (5/2027)	21.98	13.91	35.89
Ka-band, DSS-55, X/Ka, HEMT-3, LCP, diplexed (5/2027)	19.83	13.91	33.74
Ka-band, DSS-56, X/Ka, HEMT-1, RCP, non-diplexed	16.5	13.91	30.41
Ka-band, DSS-56, X/Ka, HEMT-2, RCP-error, non-diplexed	TBD	13.91	TBD
Ka-band, DSS-56, X/Ka, HEMT-3, LCP, non-diplexed	17.0	13.91	30.91

NOTE: For low-gain mode add +20 K (X-band), +180 K (K-band), +70 K (Ka-band)

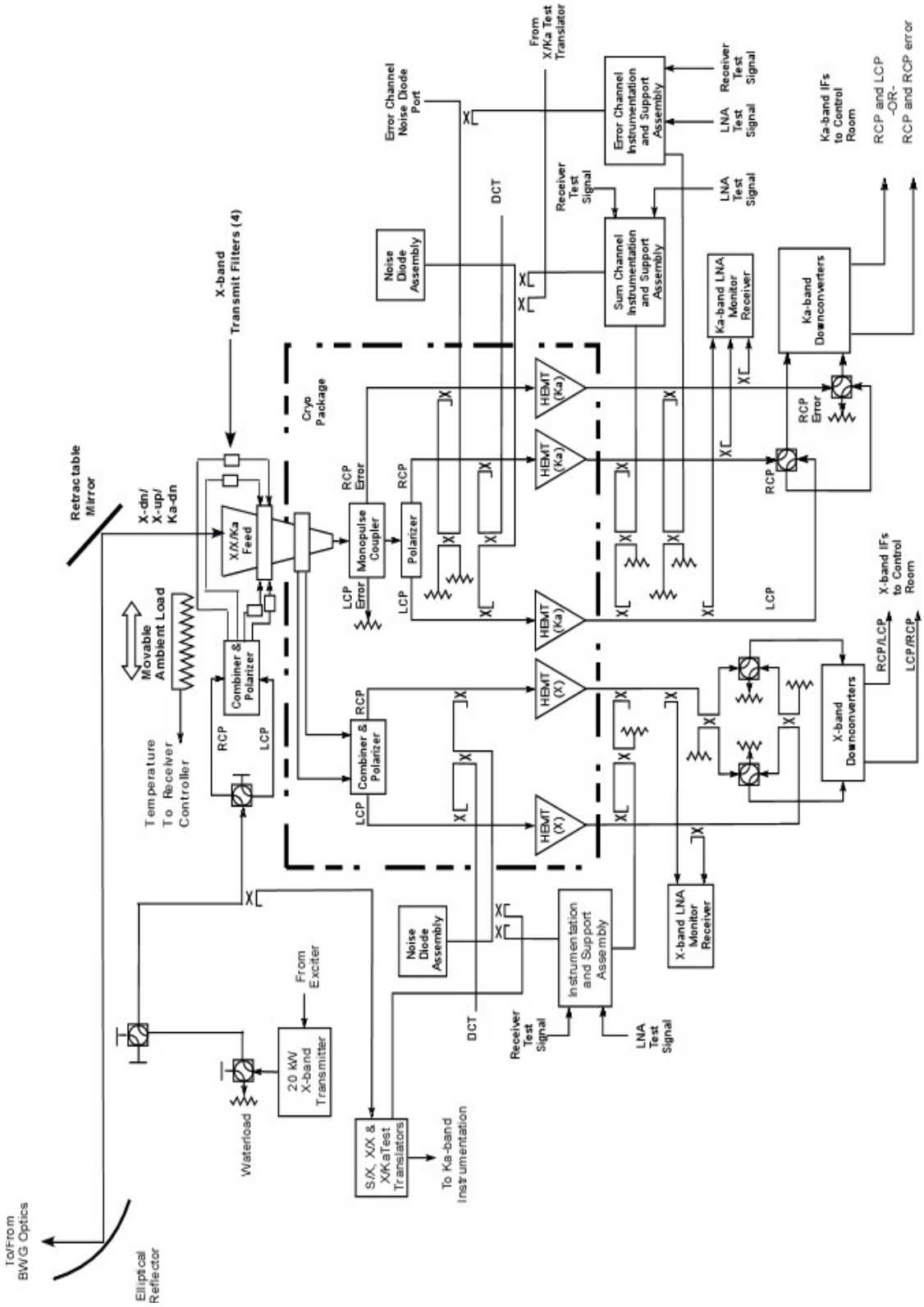

Figure 1. Functional Block Diagram of the DSS-23 Antenna.

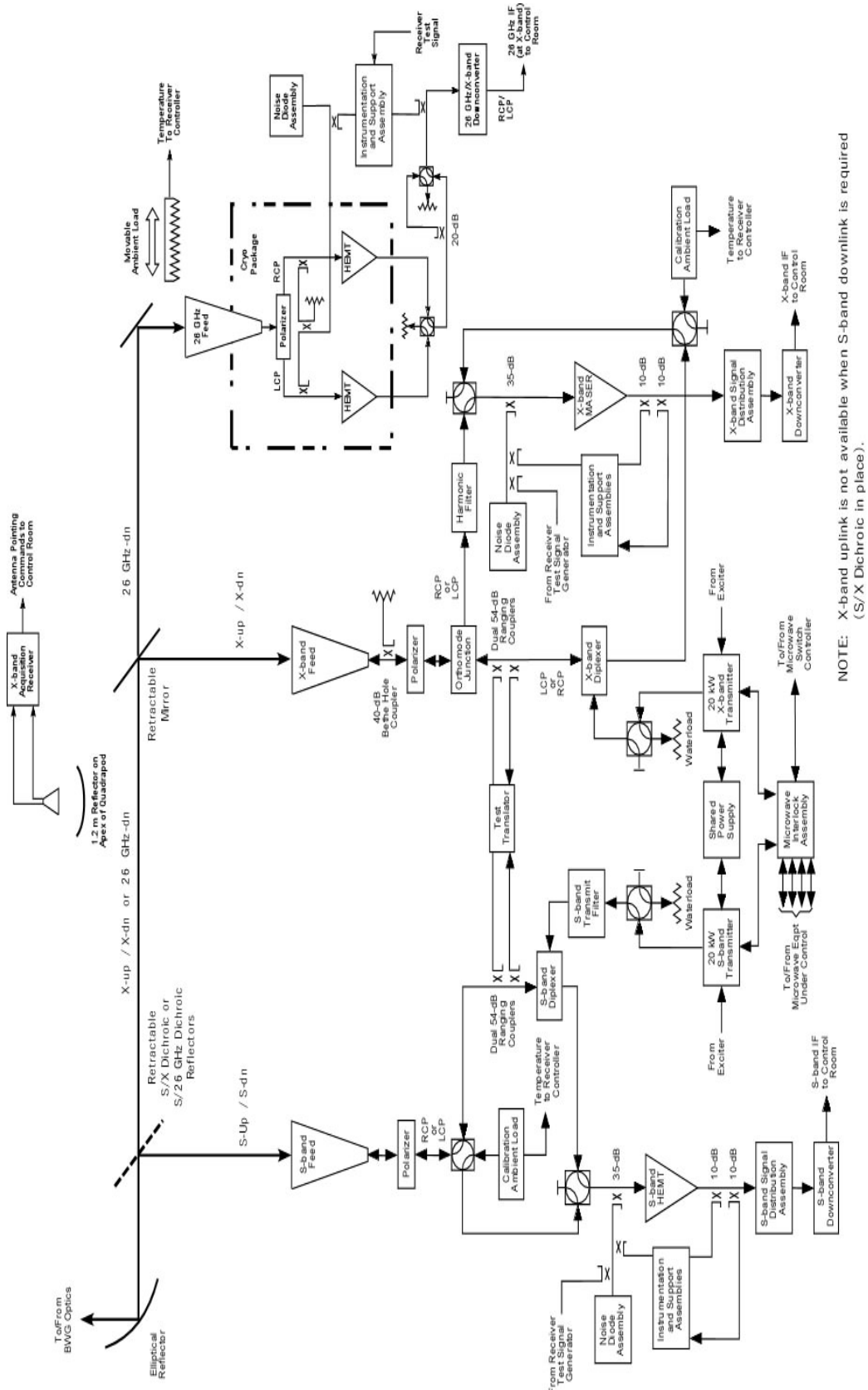

Figure 2. Functional Block Diagram of the DSS-24 Antenna.

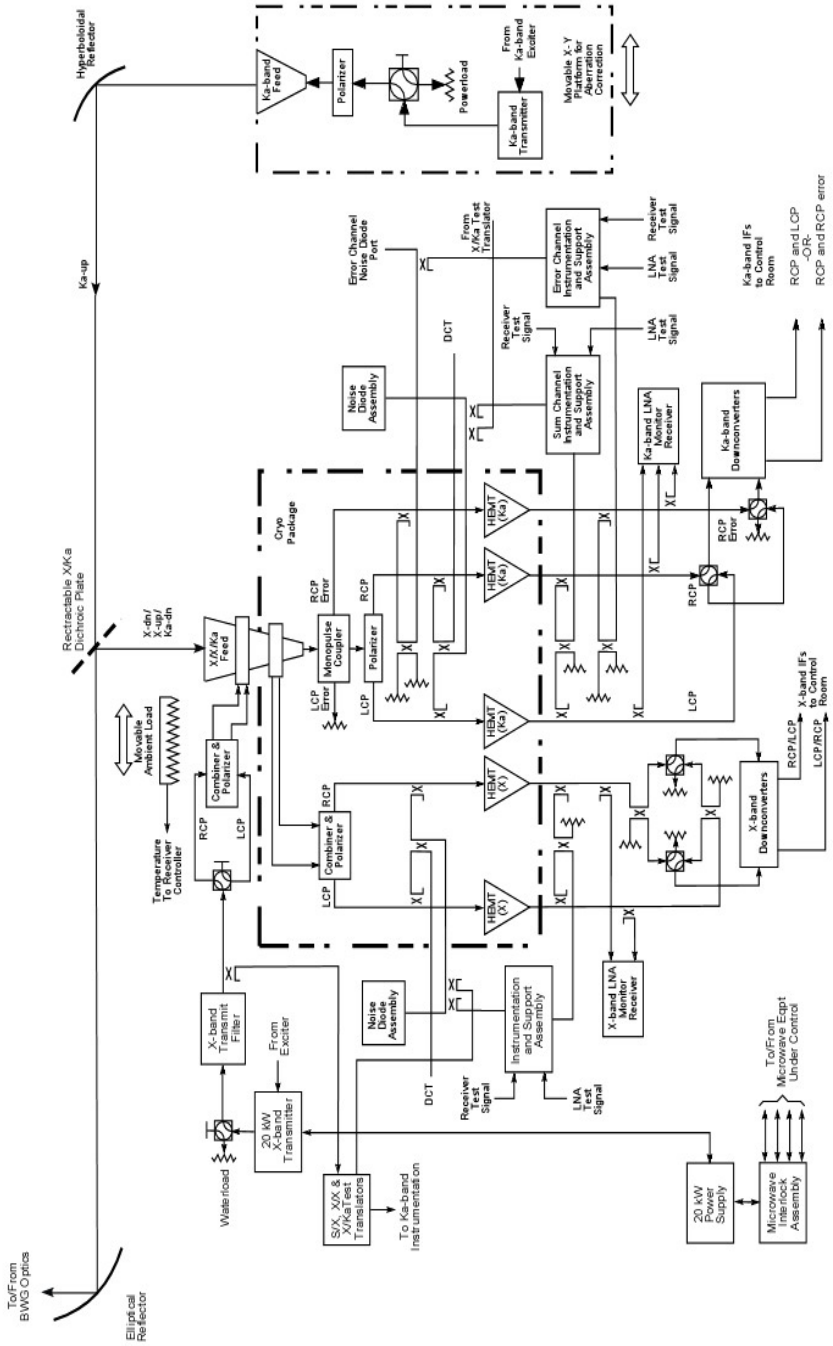

Figure 3. Functional Block Diagram of the DSS-25 Antenna.

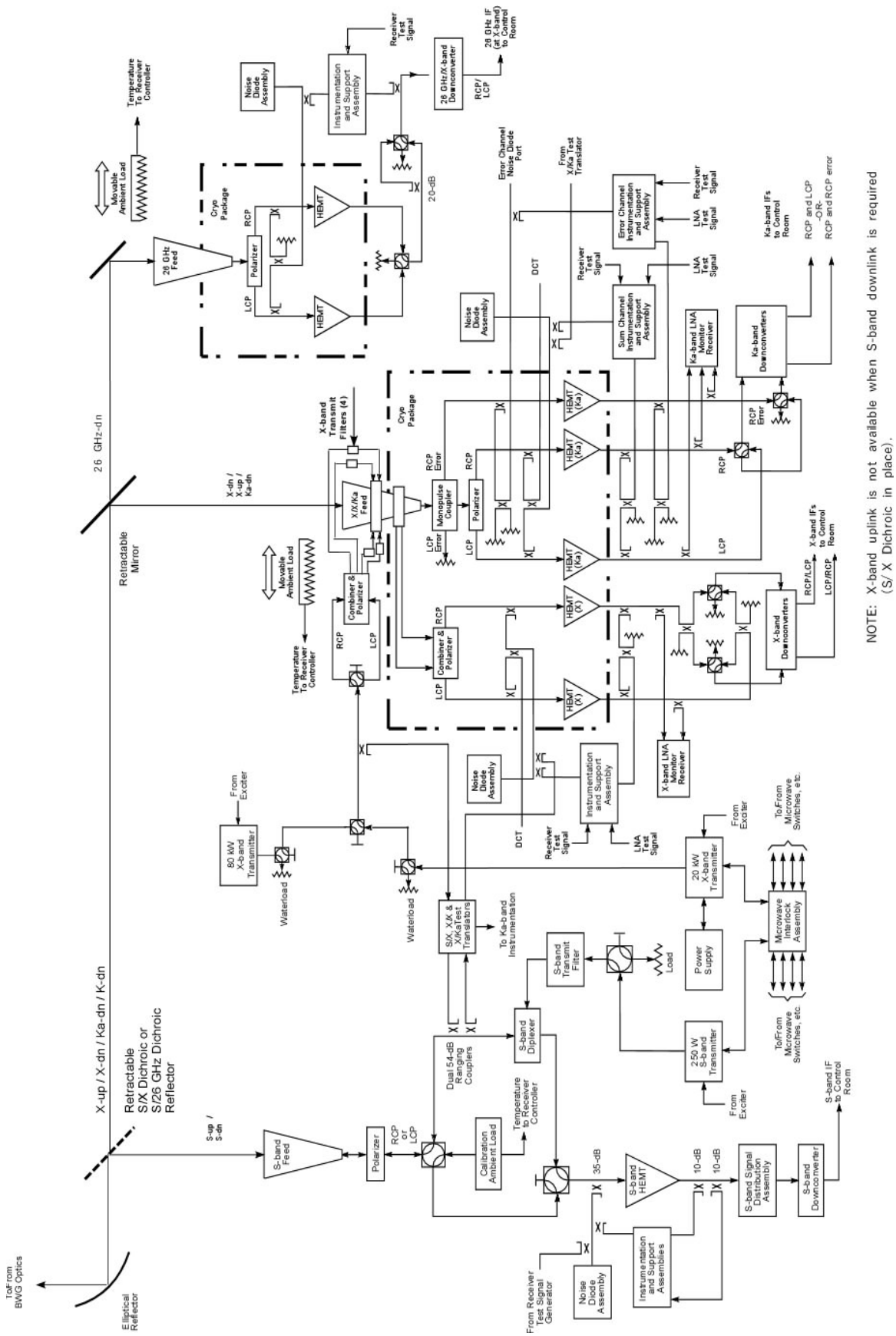

Figure 4. Functional Block Diagram of the DSS-26 Antenna.

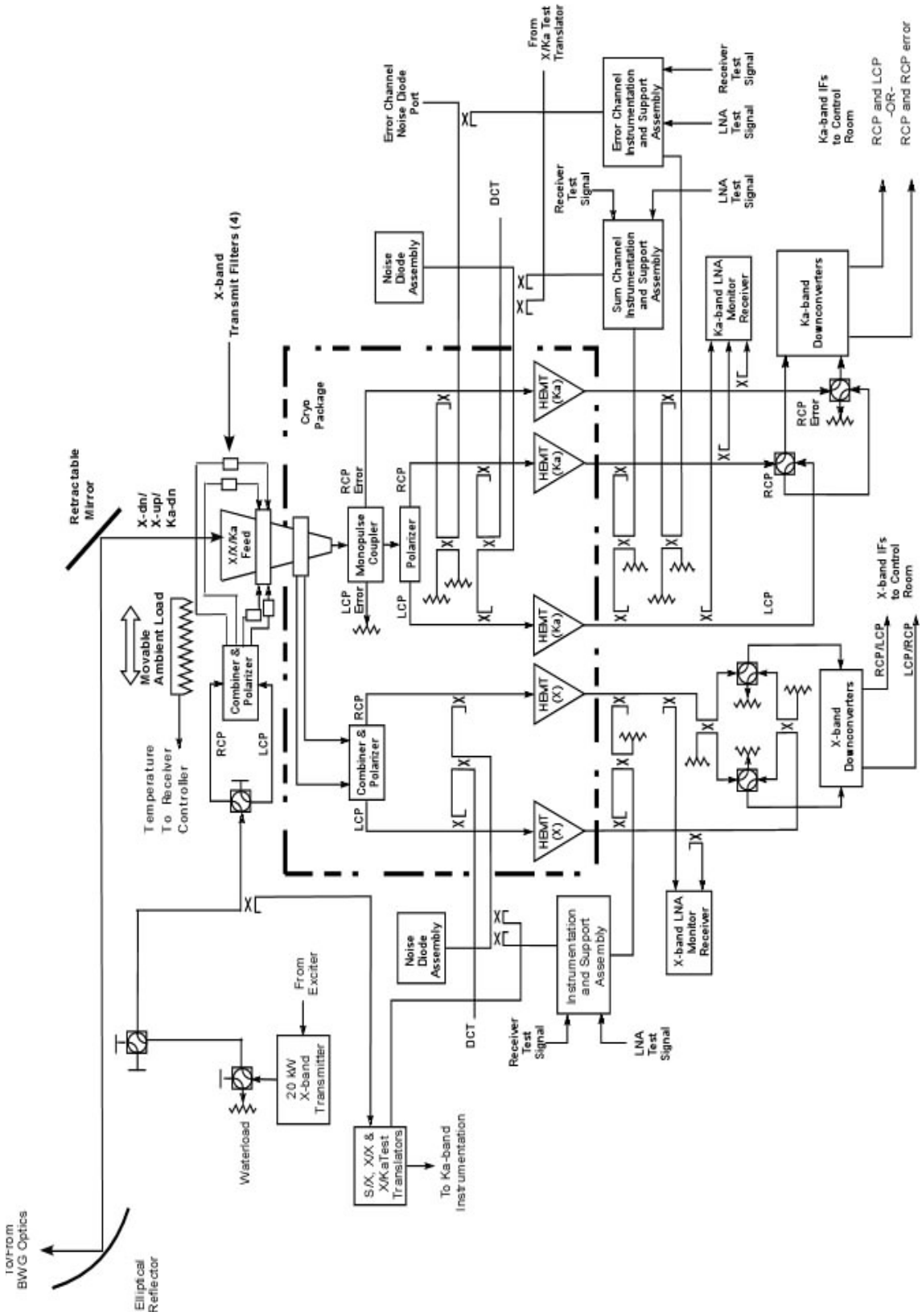

Figure 5. Functional Block Diagram of the DSS-33 Antenna.

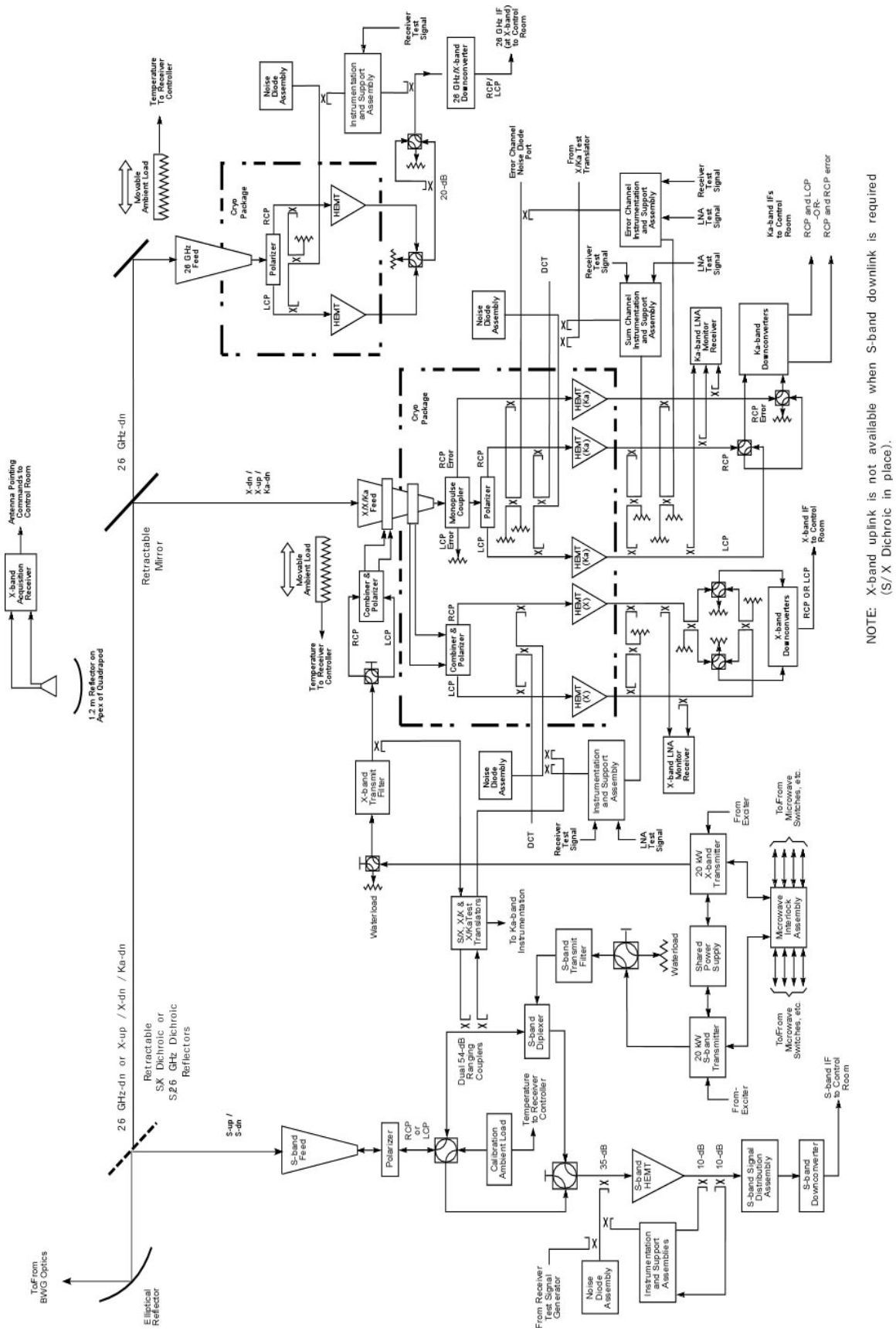

Figure 6. Functional Block Diagram of the DSS-34 Antenna.

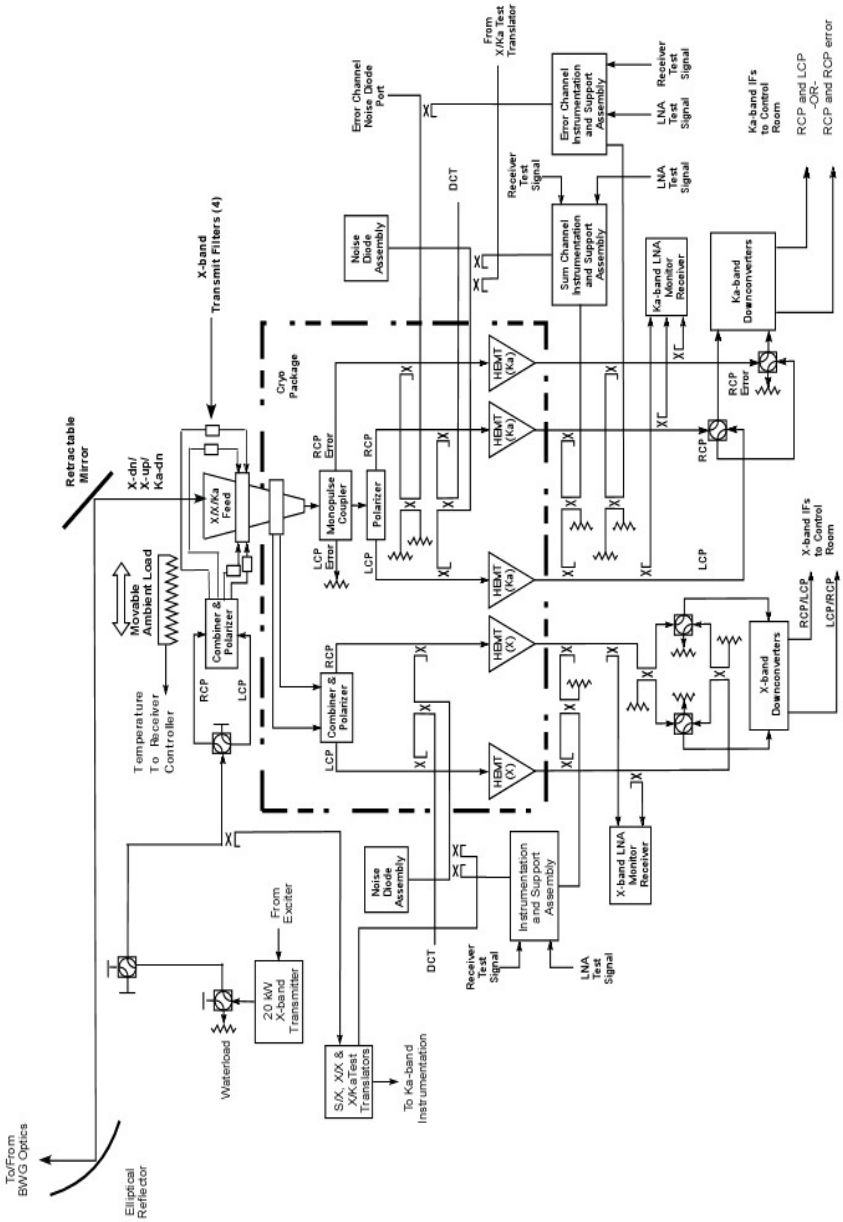

Figure 7. Functional Block Diagram of the DSS-35 Antenna.

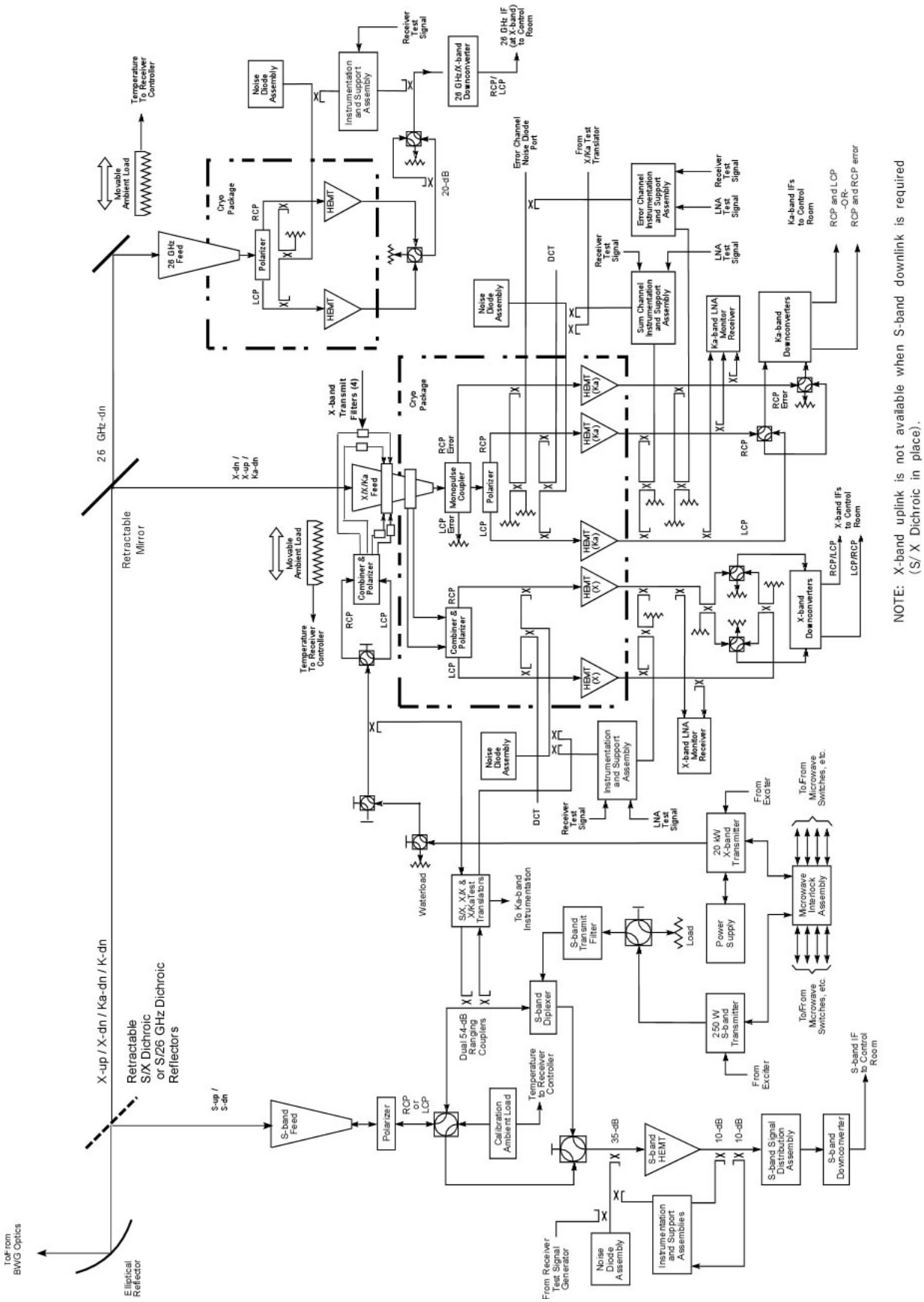

Figure 8. Functional Block Diagram of the DSS-36 Antenna.

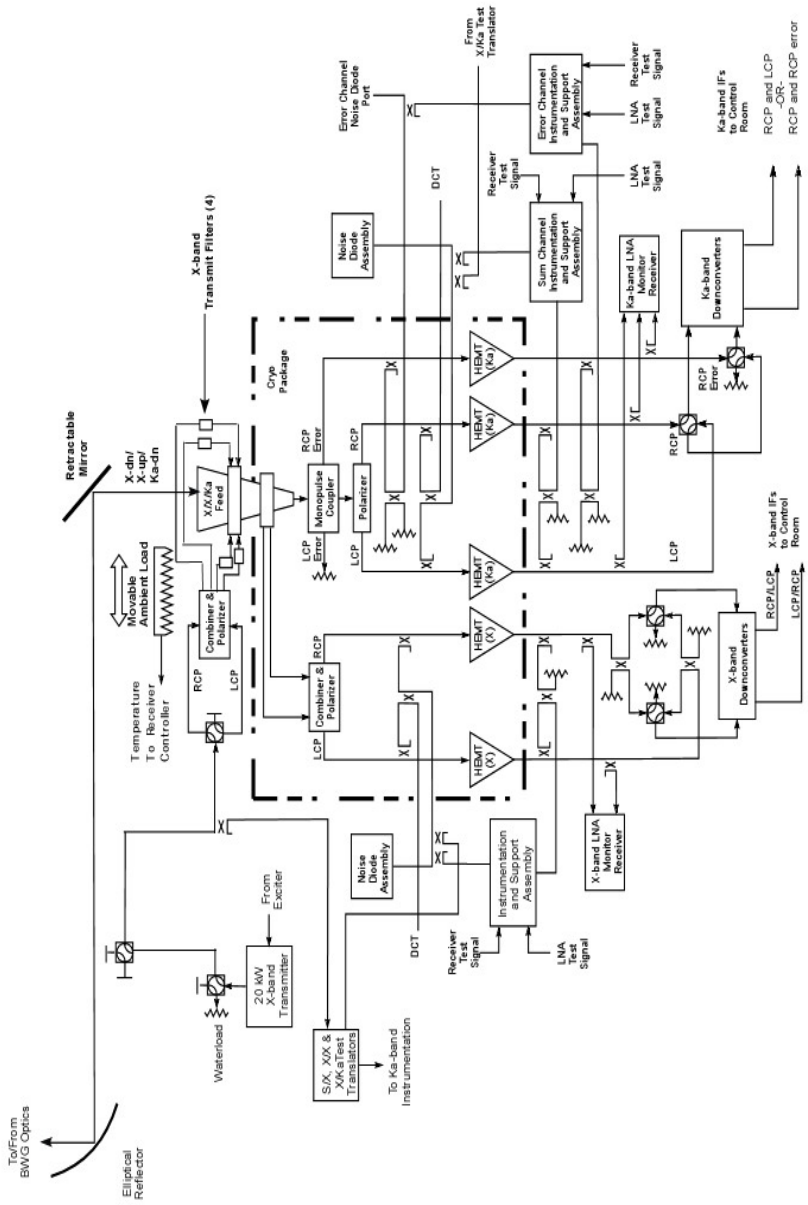

Figure 9. Functional Block Diagram of the DSS-53 Antenna.

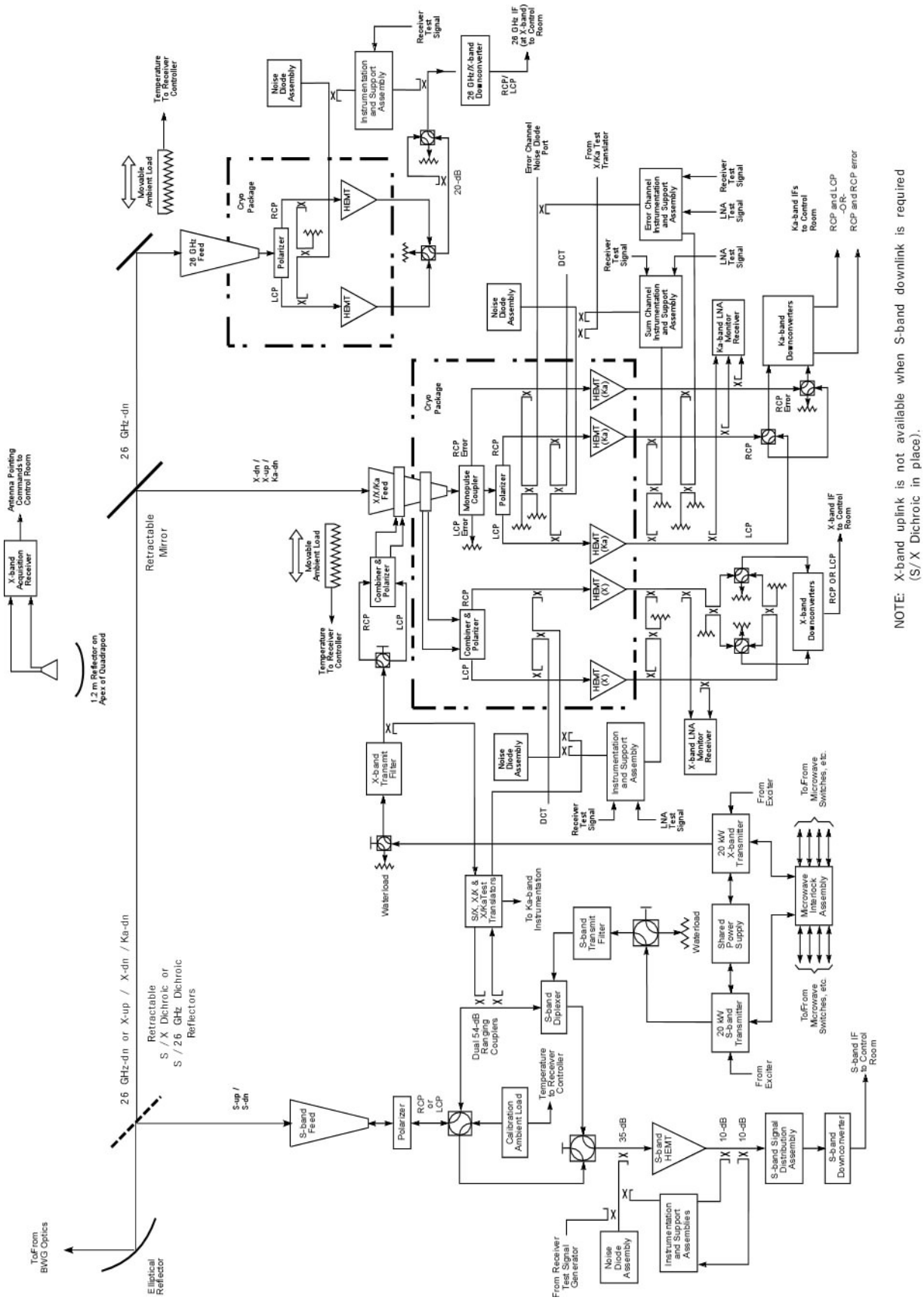

Figure 10. Functional Block Diagram of the DSS-54 Antenna.

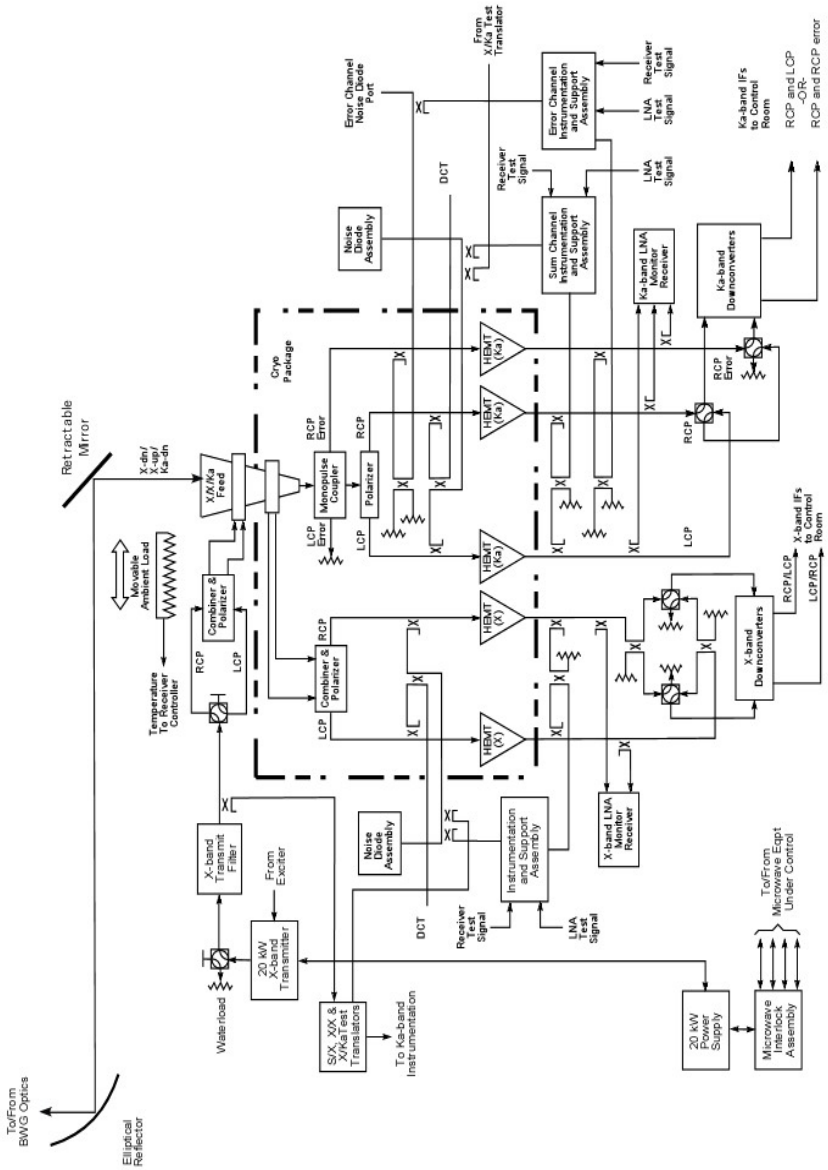

Figure 11. Functional Block Diagram of the DSS-55 Antenna.

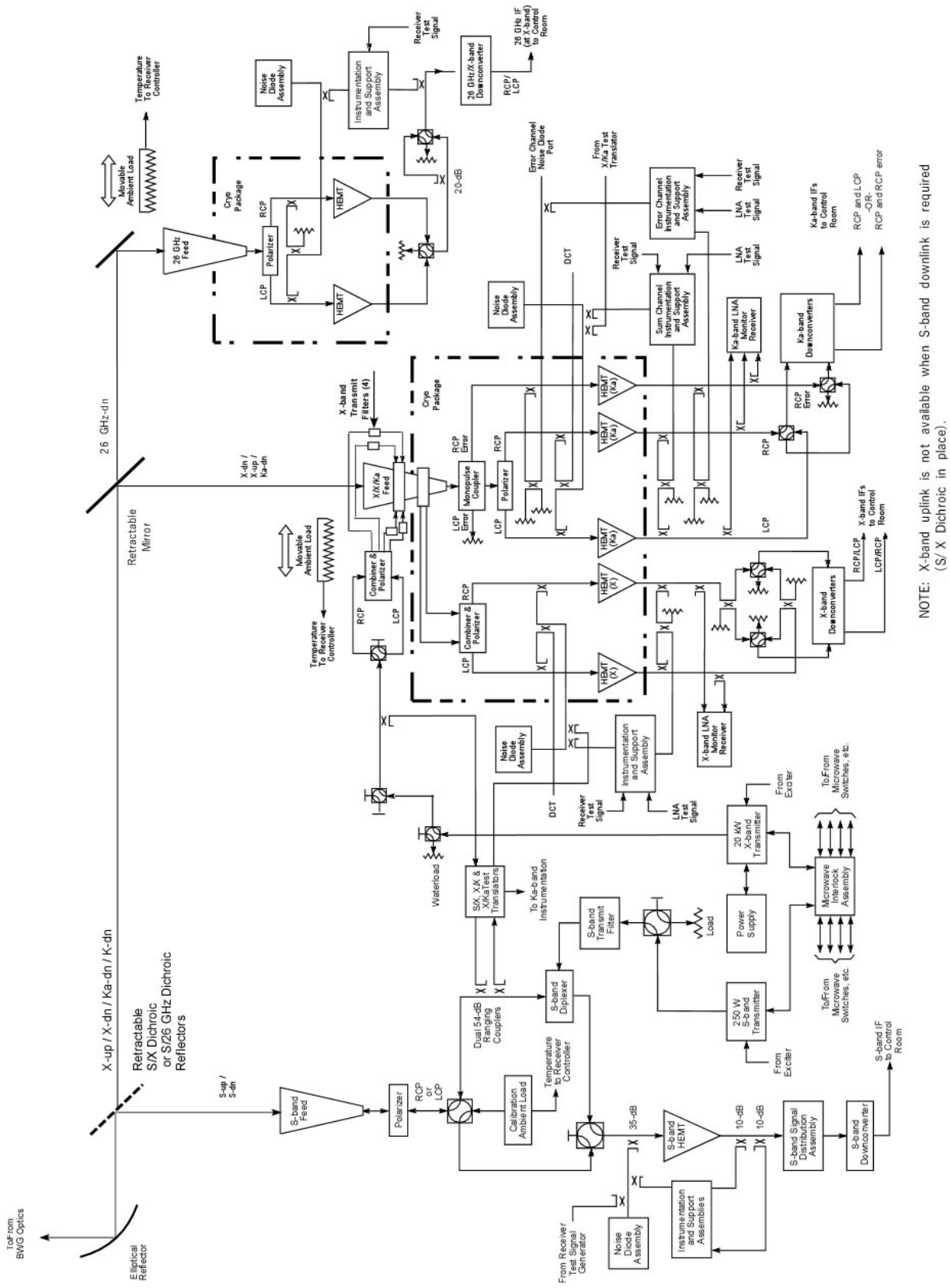

Figure 12. Functional Block Diagram of the DSS-56 Antenna.

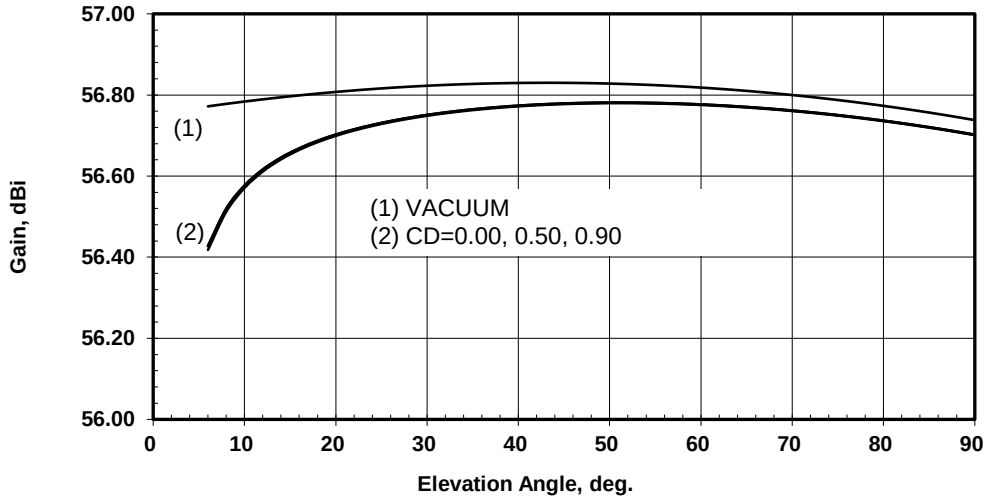

Figure 13. DSS-34 (Canberra) S-Band Receive Gain versus Elevation Angle, S/X-Mode (S/X Dichroic In Place), 2295 MHz

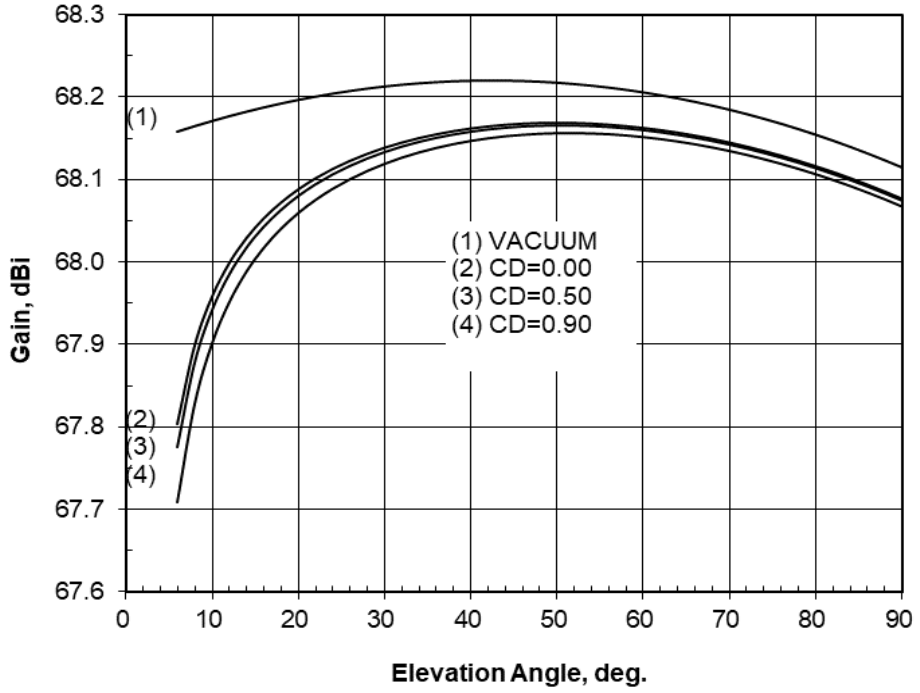

Figure 14. DSS-25 (Goldstone) X-Band Receive Gain versus Elevation Angle, X/Ka-Mode, 8420 MHz

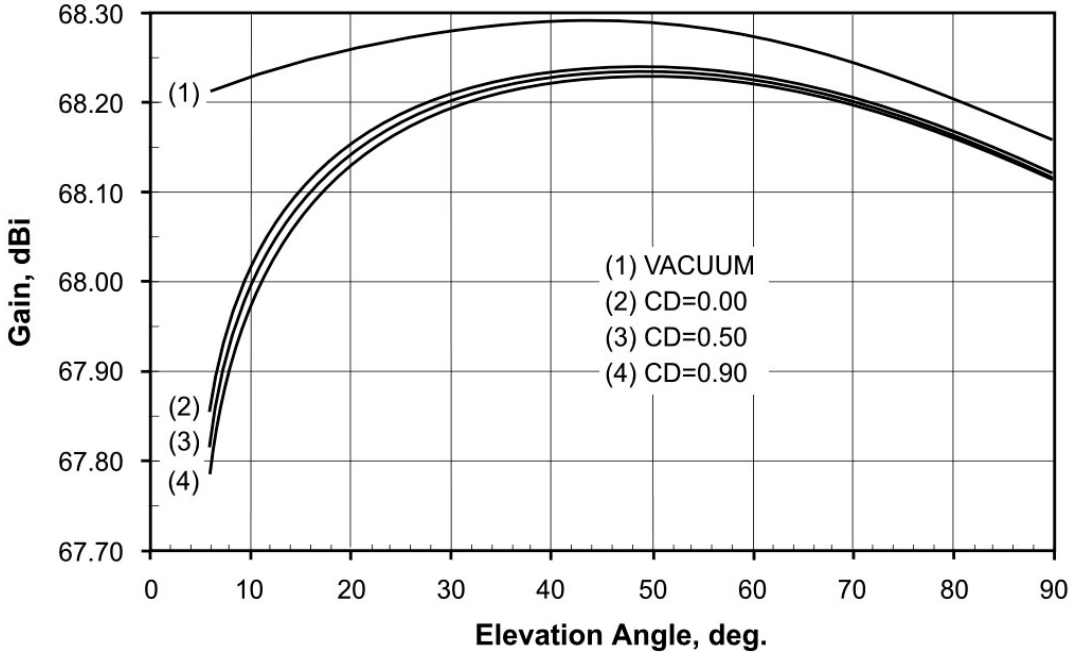

Figure 15. DSS-26 (Goldstone) X-Band Receive Gain versus Elevation Angle, X/Ka-Mode, 8420 MHz

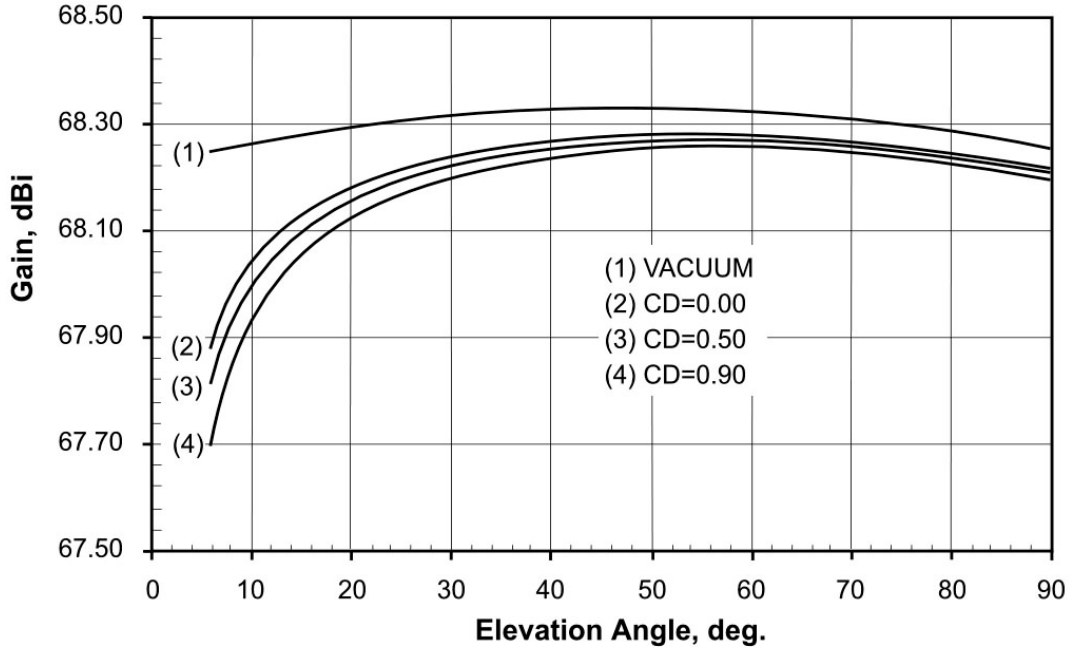

Figure 16. DSS-34 (Canberra) X-Band Receive Gain versus Elevation Angle, X/Ka-Mode (S/X Dichroic Retracted), 8420 MHz

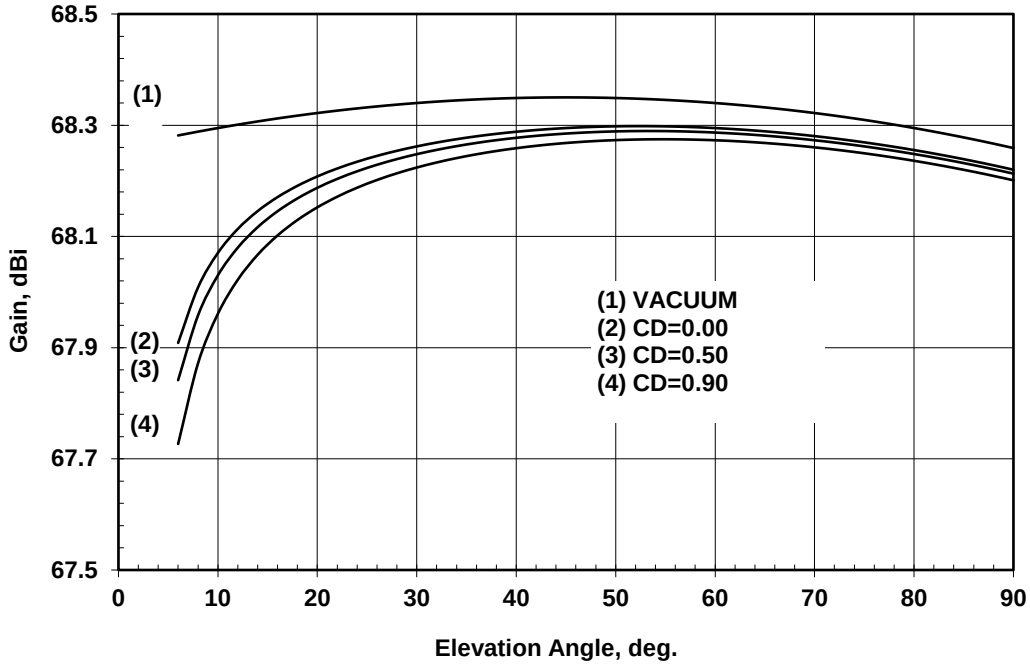

Figure 17. DSS-35 (Canberra) X-Band Receive Gain versus Elevation Angle, X/Ka-Mode, 8420 MHz

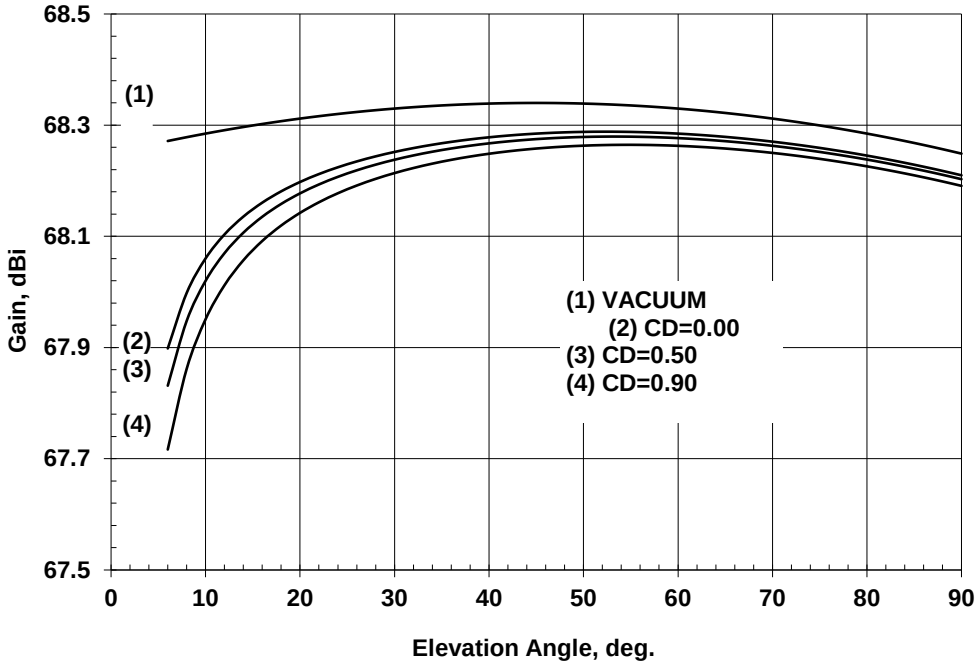

Figure 18. DSS-36 (Canberra) X-band Receive Gain versus Elevation Angle, X/Ka-Mode, 8420 MHz

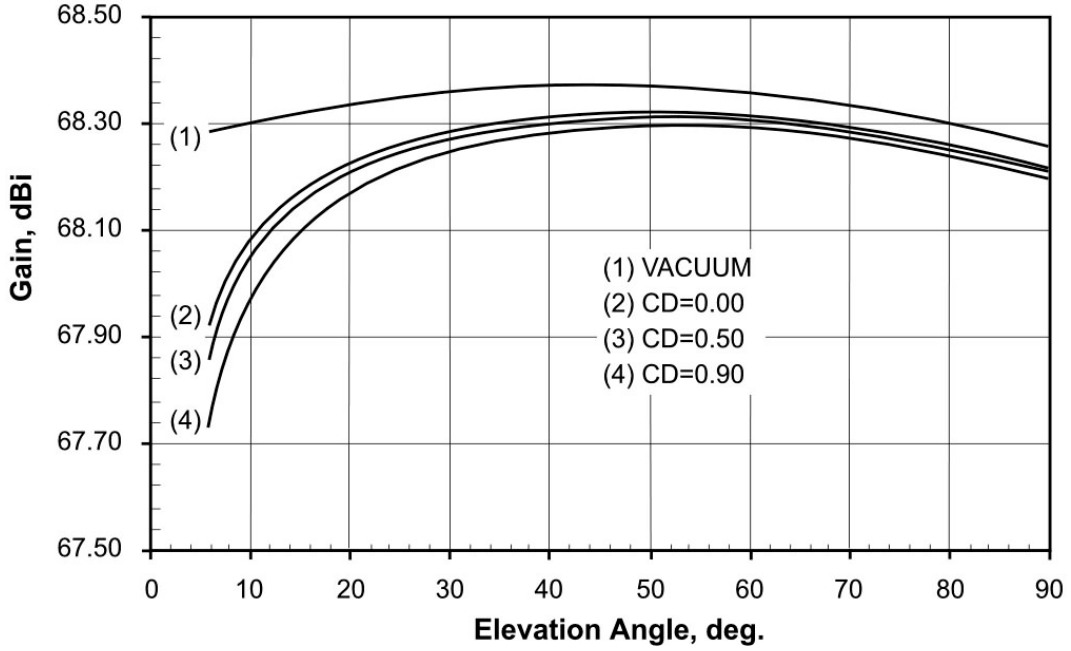

Figure 19. DSS-54 (Madrid) X-Band Receive Gain versus Elevation Angle, X/Ka-Mode (S/X Dichroic Retracted), 8420 MHz

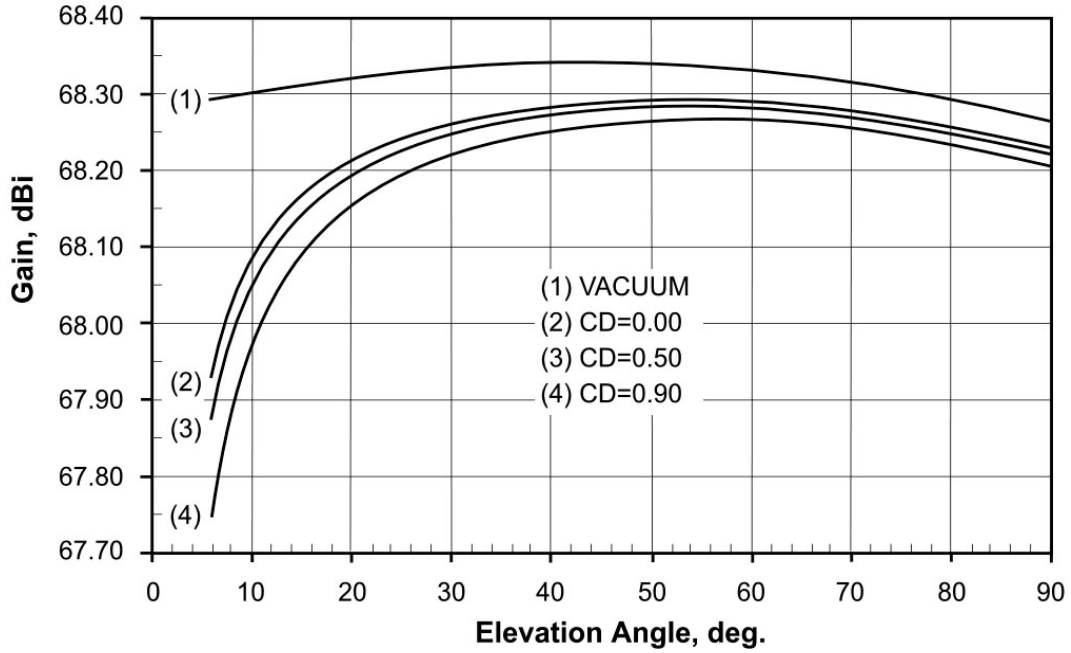

Figure 20. DSS-55 (Madrid) X-Band Receive Gain versus Elevation Angle, X/Ka Mode, 8420 MHz

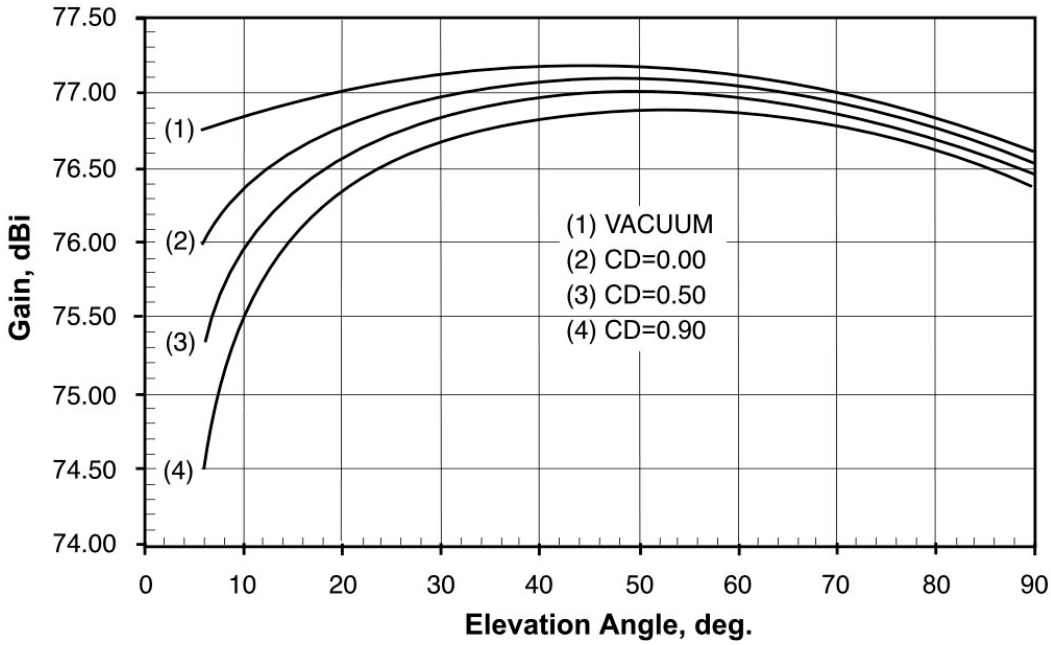

Figure 21. DSS-24 (Goldstone) K-Band Receive Gain versus Elevation Angle, K-Only Mode (S/K Dichroic Retracted), 26000 MHz

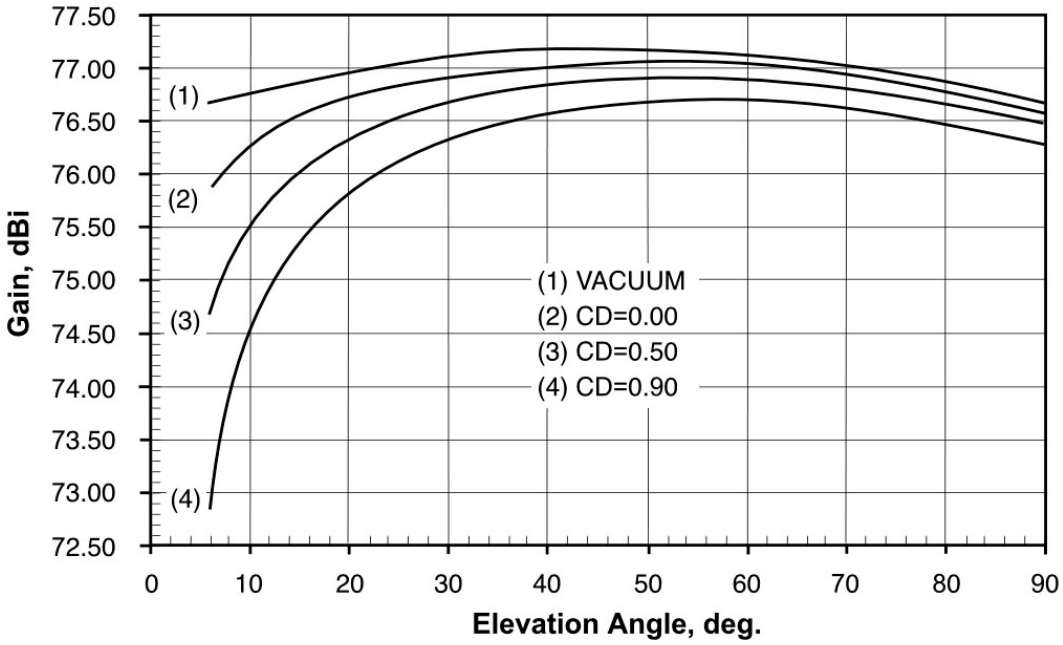

Figure 22. DSS-34 (Canberra) K-Band Receive Gain versus Elevation Angle, K-Only Mode (S/K Dichroic Retracted), 26000 MHz

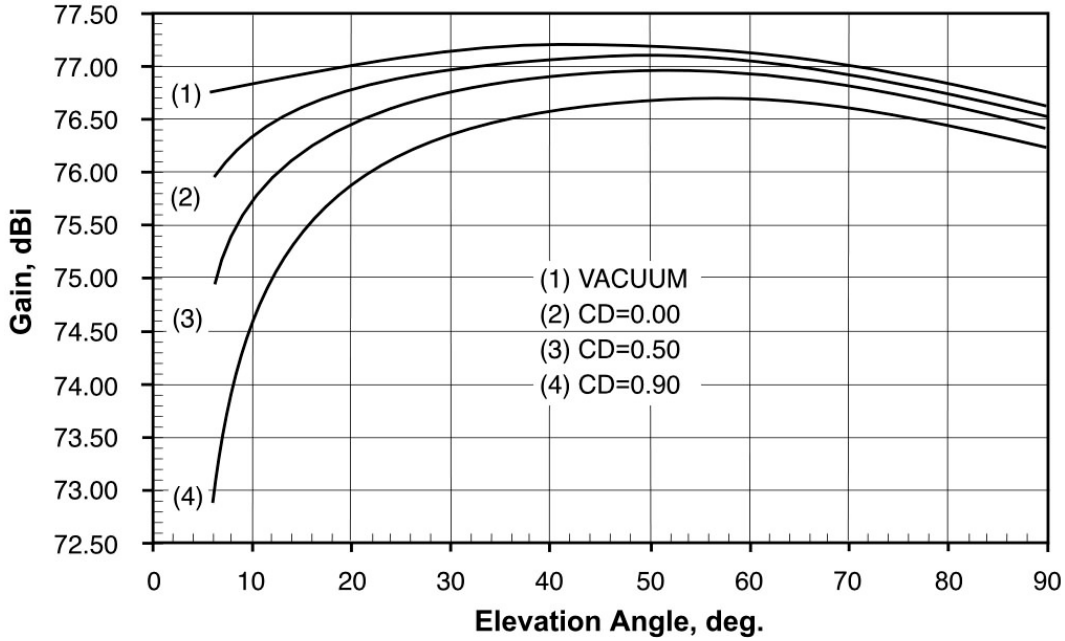

Figure 23. DSS-54 (Madrid) K-Band Receive Gain versus Elevation Angle, K-Only Mode (S/K Dichroic Retracted), 26000 MHz

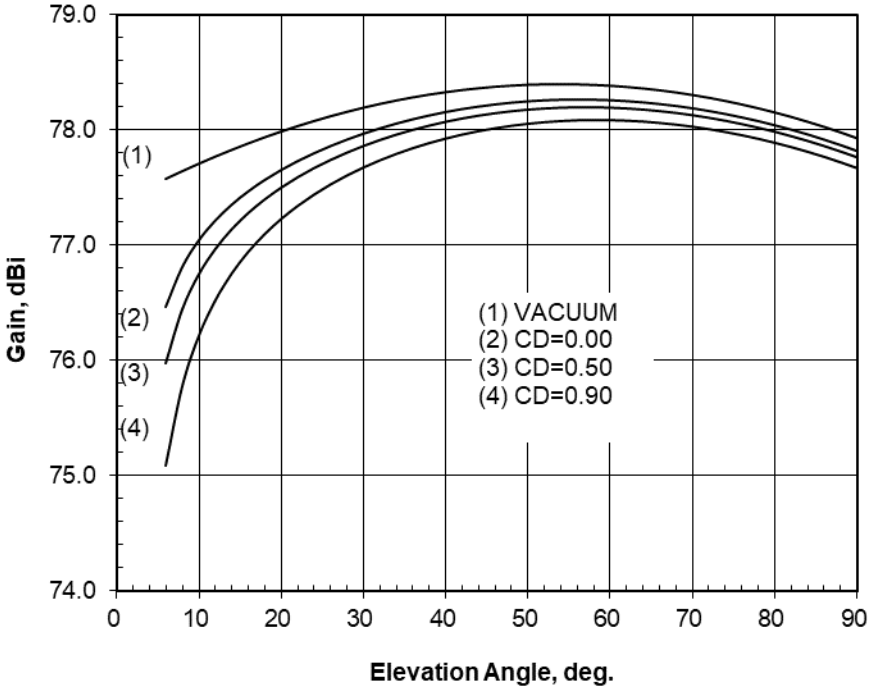

Figure 24. DSS-25 (Goldstone) Ka-Band Receive Gain versus Elevation Angle, X/Ka-Mode, 32000 MHz

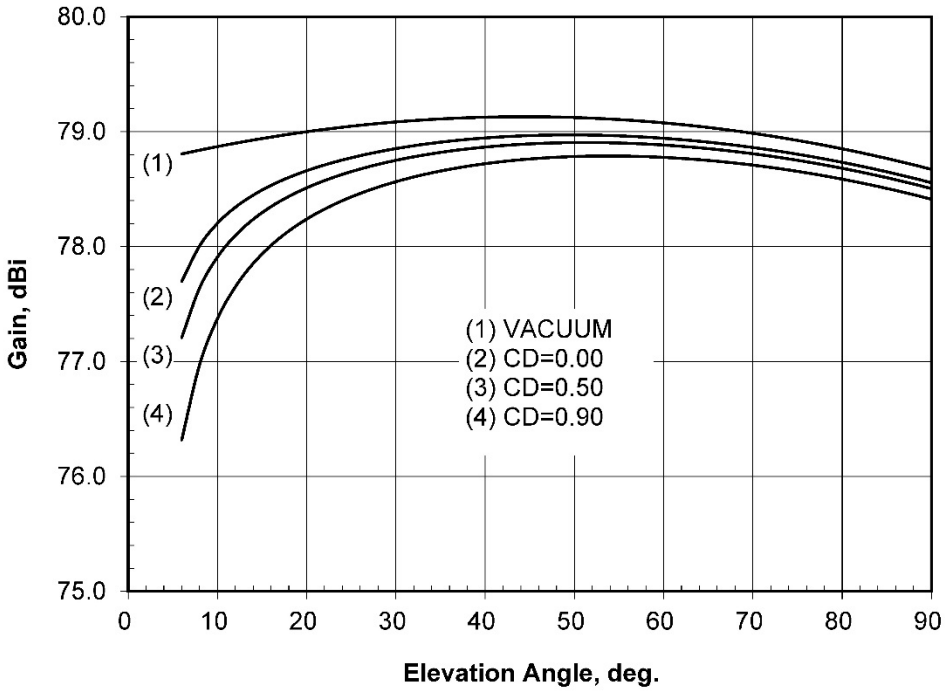

Figure 25. DSS-26 (Goldstone) Ka-Band Receive Gain versus Elevation Angle, X/Ka-Mode, 32000 MHz

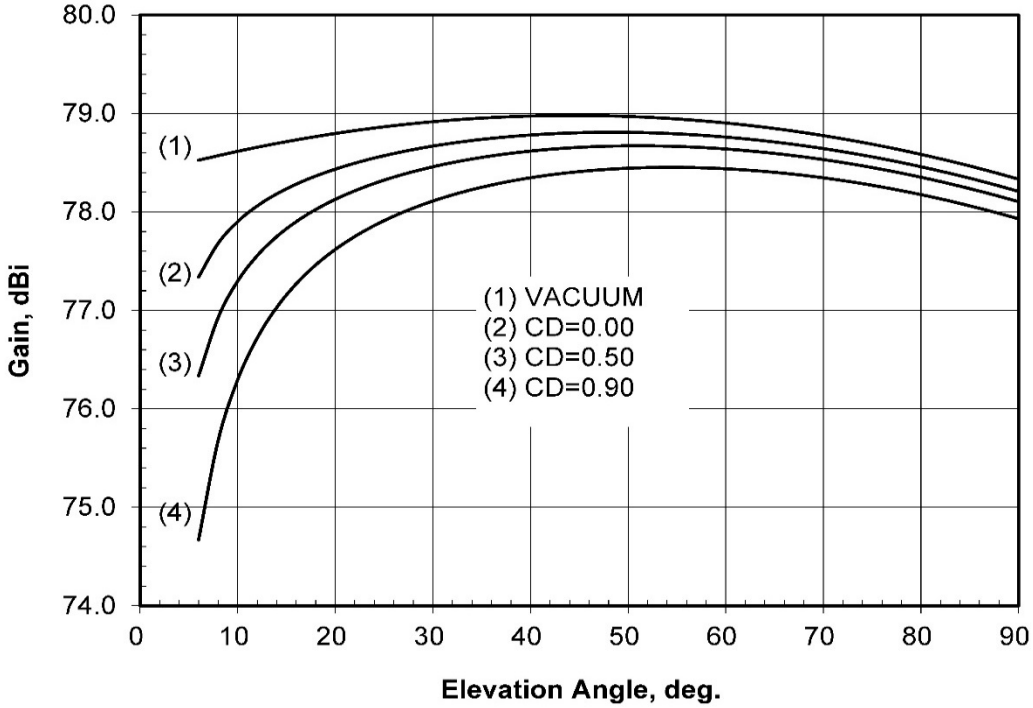

Figure 26. DSS-34 (Canberra) Ka-Band Receive Gain versus Elevation Angle, X/Ka-Mode, 32000 MHz

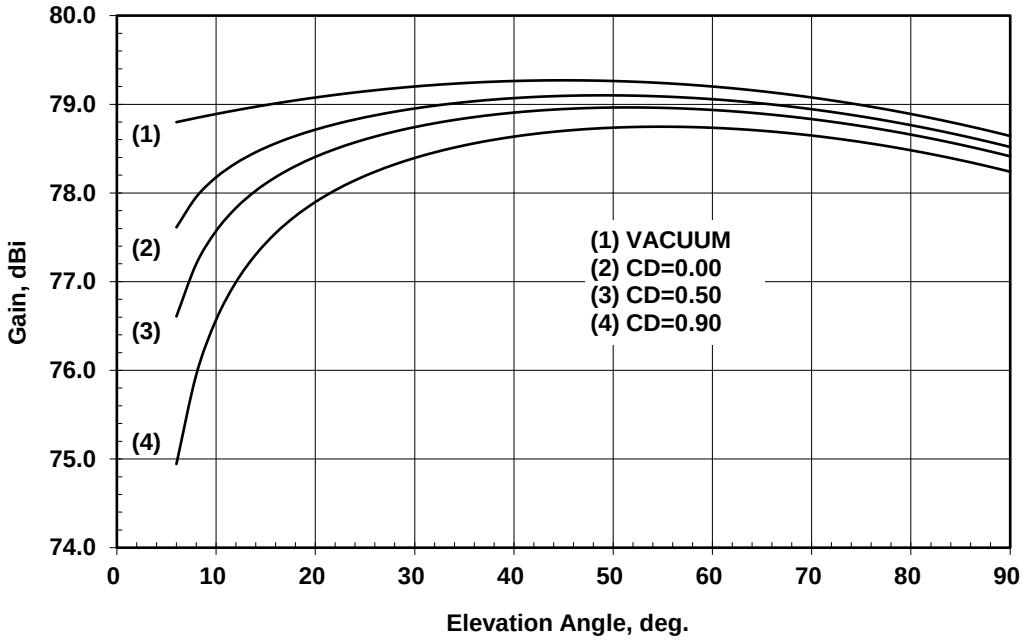

Figure 27. DSS-35 (Canberra) Ka-Band Receive Gain versus Elevation Angle, X/Ka-Mode, 32000 MHz

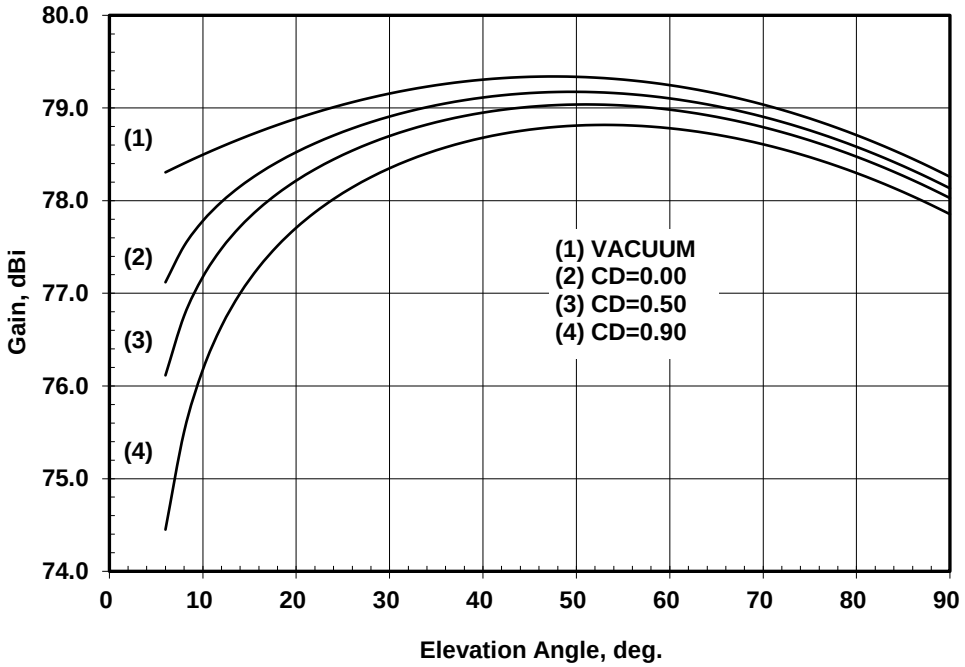

Figure 28. DSS-36 (Canberra) Ka-Band Receive Gain versus Elevation Angle,X/Ka-Mode, 32000 MHz

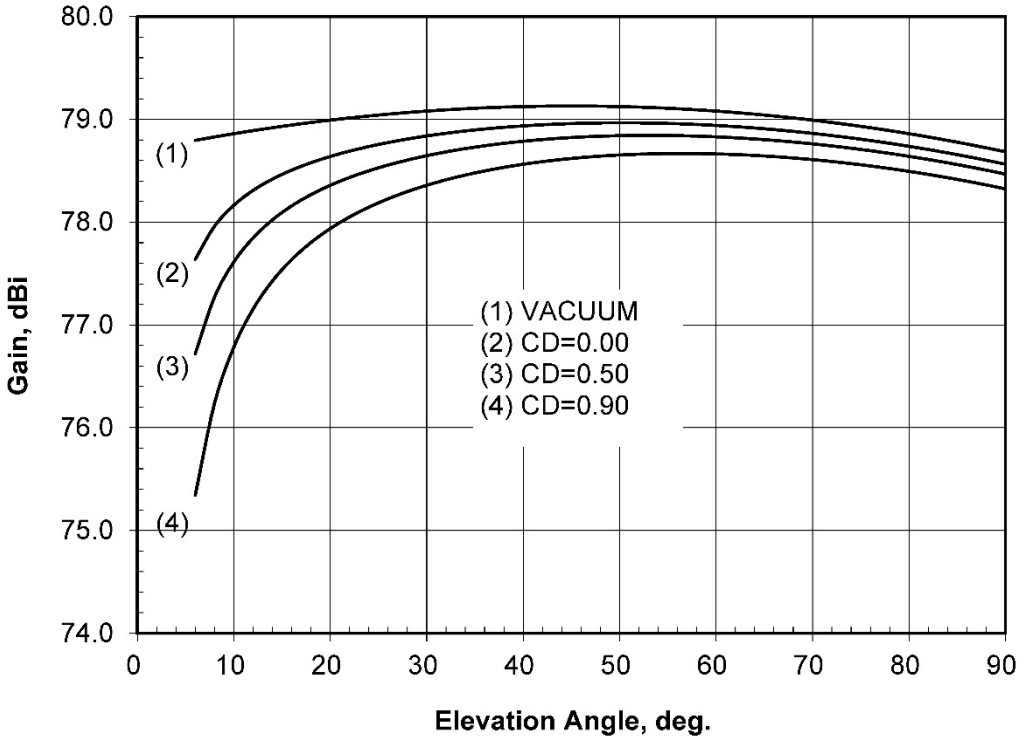

Figure 29. DSS-55 (Madrid) Ka-Band Receive Gain versus Elevation Angle,X/Ka-Mode, 32000 MHz

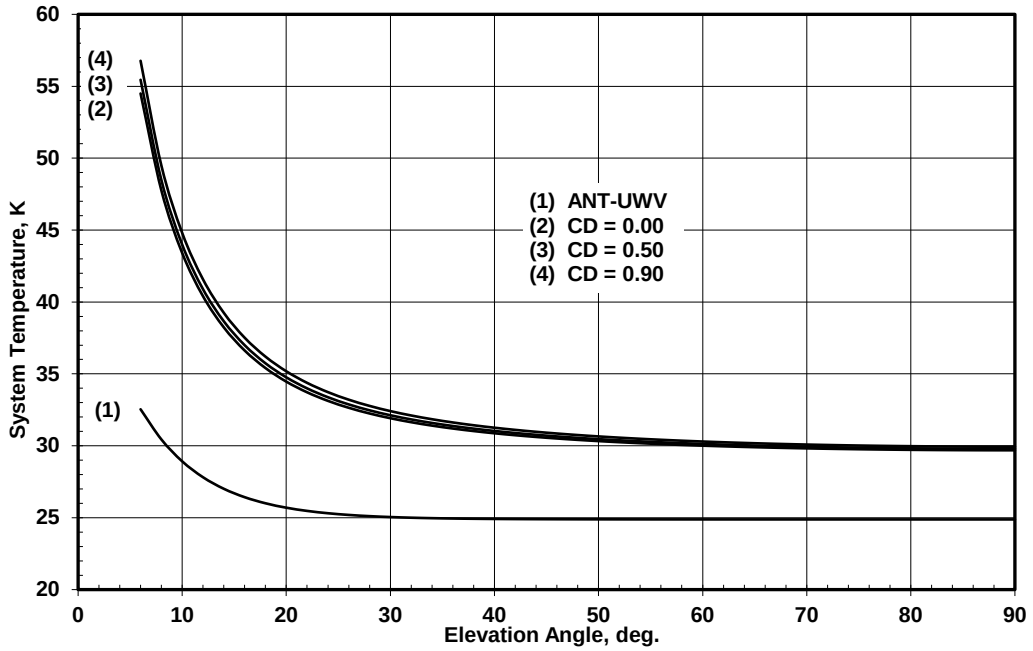

Figure 30. DSS-34 (Goldstone) S-Band System Temperature versus Elevation Angle, S/X-Mode (S/X Dichroic In Place), Non-Diplexed Path, 2295 MHz

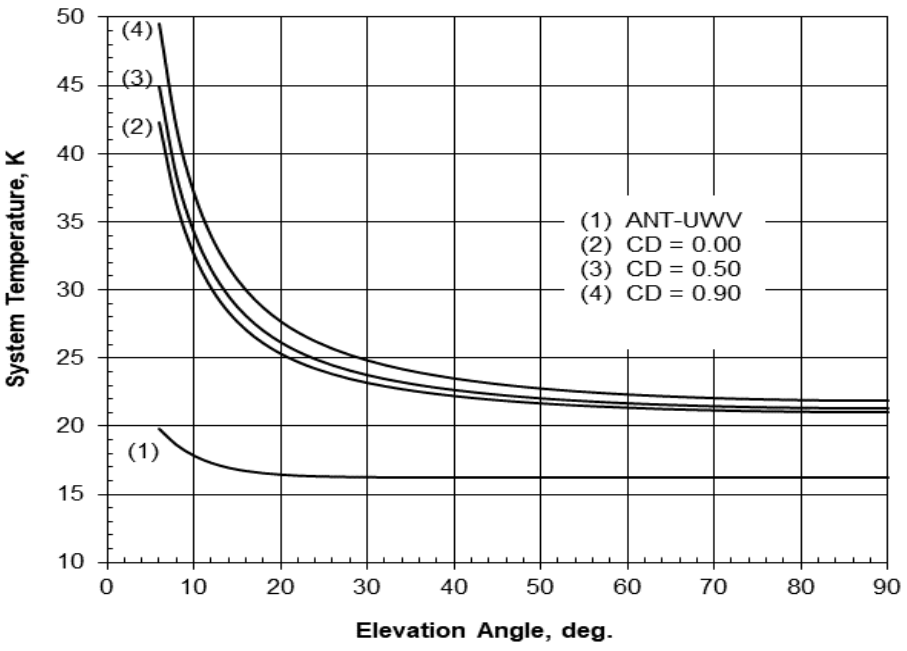

Figure 31. DSS-25 (Goldstone) X-Band RCP System Temperature versus Elevation Angle, X/Ka-Mode, 8420 MHz

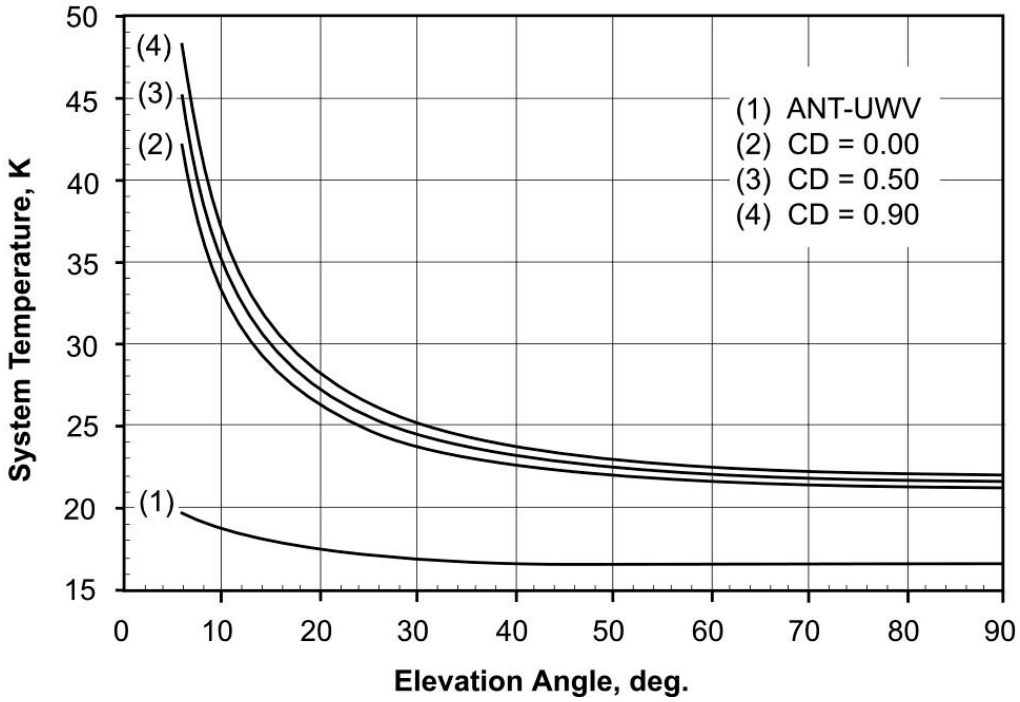

Figure 32. DSS-26 (Goldstone) X-Band RCP System Temperature versus Elevation Angle, X/Ka-Mode, 8420 MHz

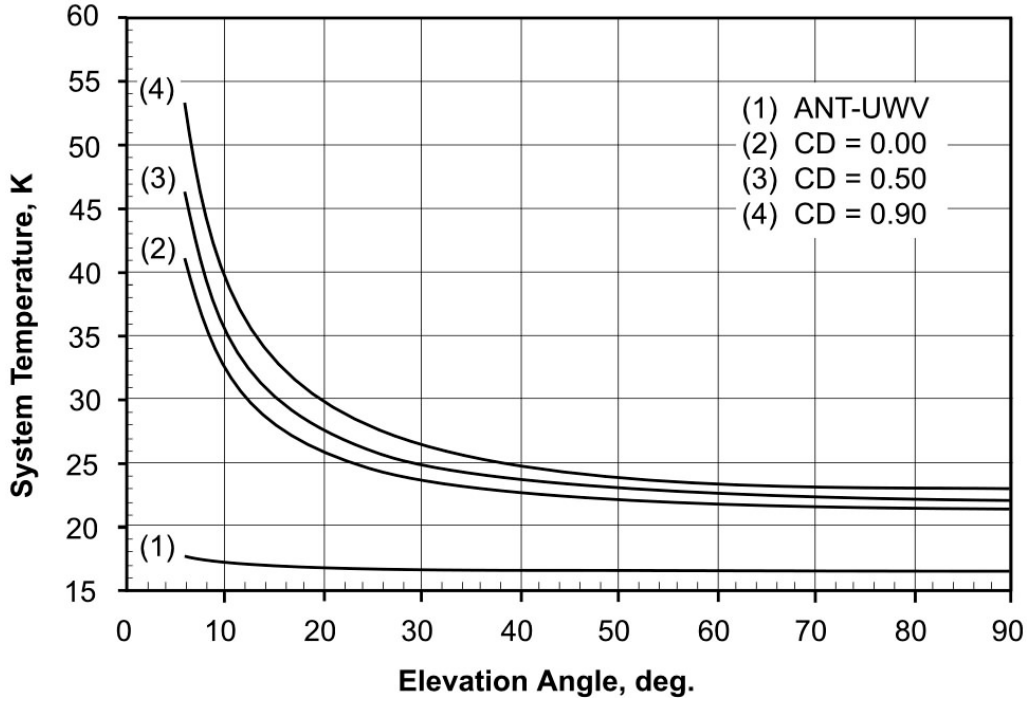

Figure 33. DSS-34 (Canberra) X-Band RCP System Temperature versus Elevation Angle, X/Ka-Mode (S/X Dichroic Retracted), 8420 MHz

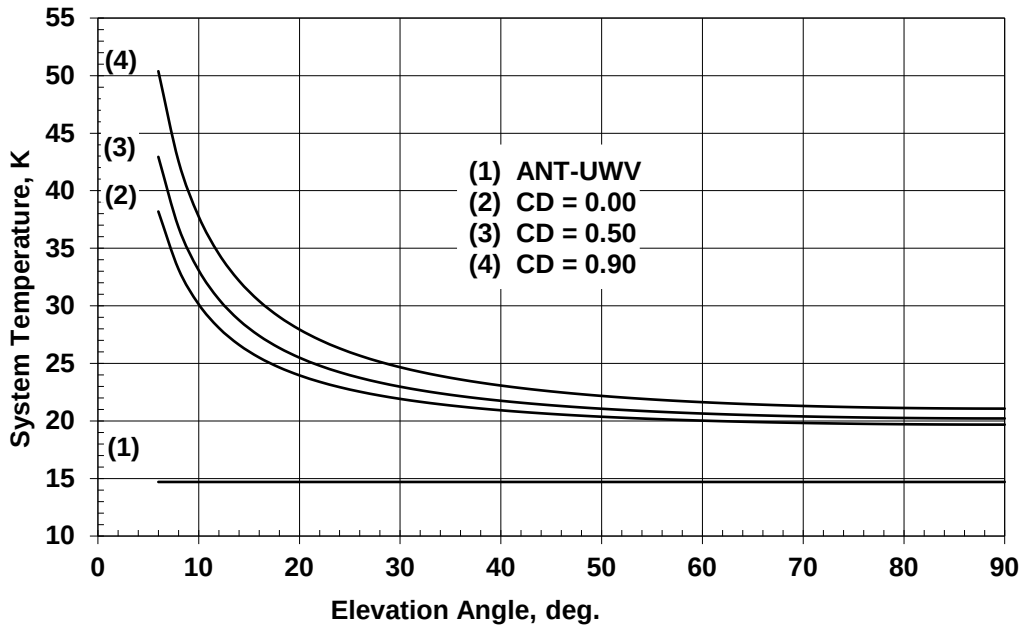

Figure 34. DSS-35 (Canberra) X-Band RCP System Temperature versus Elevation Angle, X/Ka-Mode, 8420 MHz

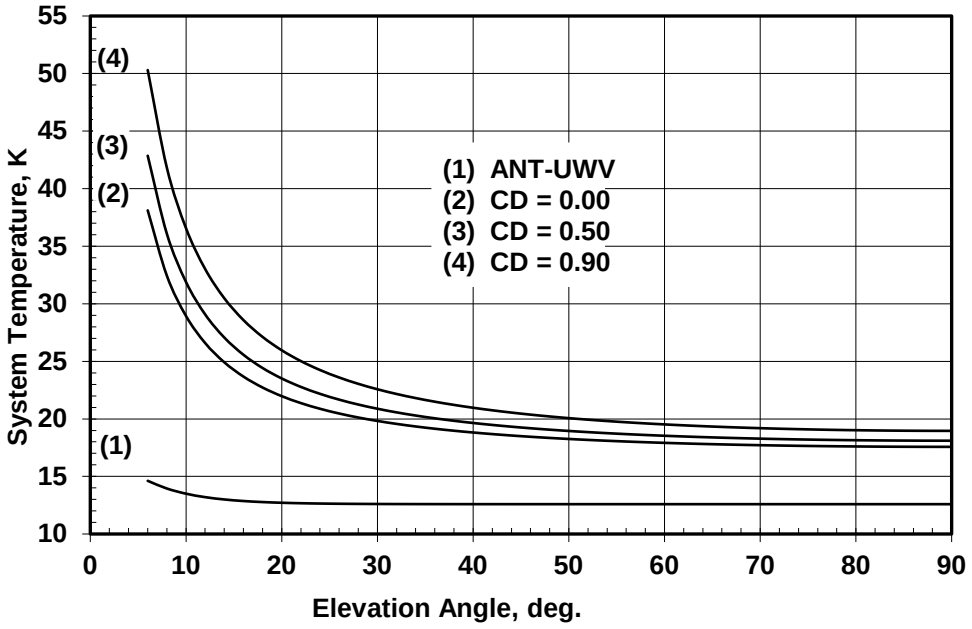

Figure 35. DSS-36 (Canberra) X-Band RCP System Temperature versus Elevation Angle, X/Ka-Mode, 8420 MHz

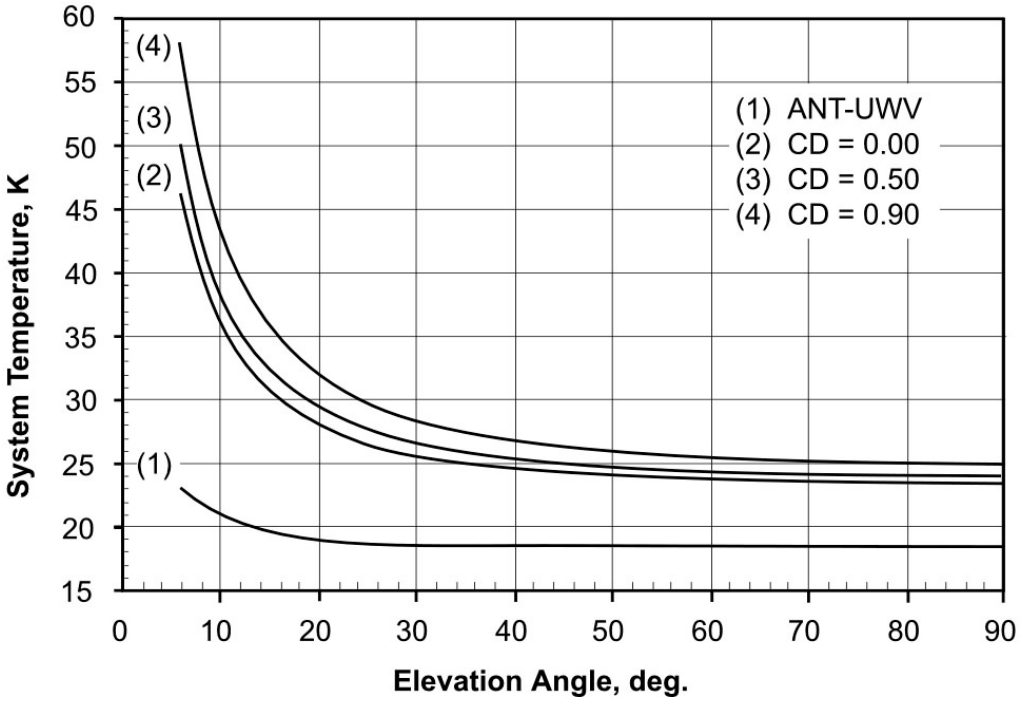

Figure 36. DSS-54 (Madrid) X-Band RCP System Temperature versus Elevation Angle, X/Ka-Mode (S/X Dichroic Retracted), 8420 MHz

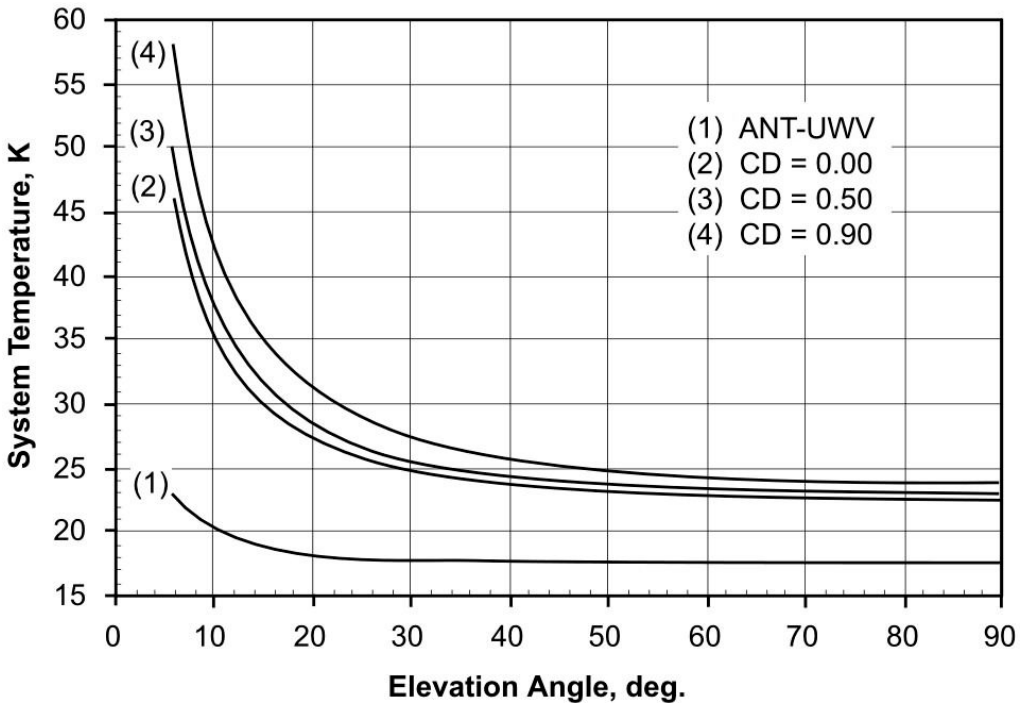

Figure 37. DSS-55 (Madrid) X-Band RCP System Temperature versus Elevation Angle, X/Ka-Mode, 8420 MHz

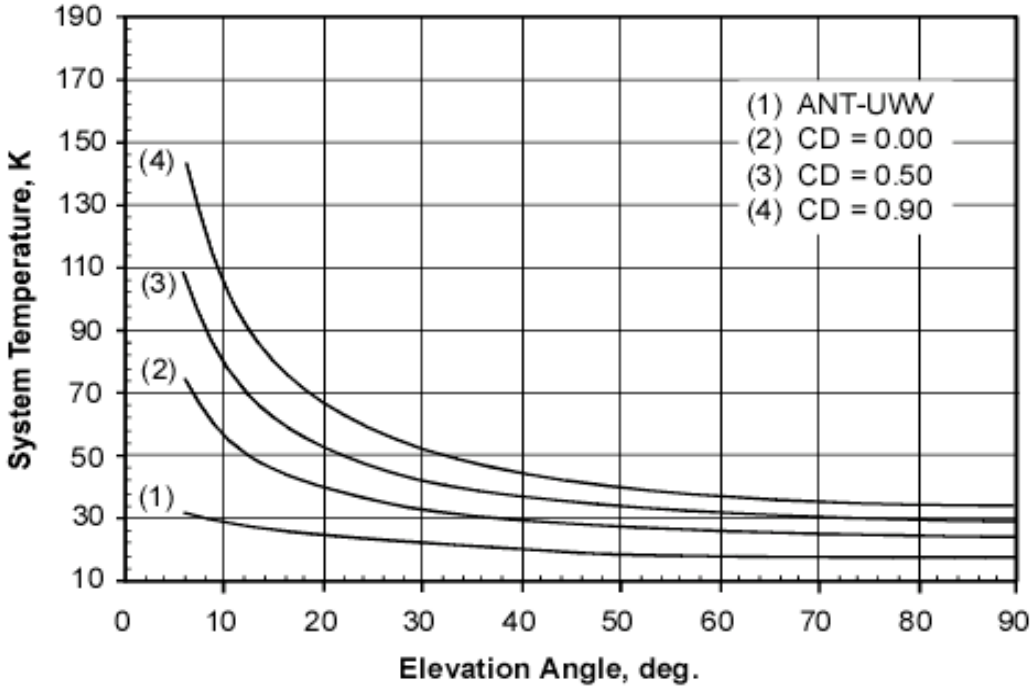

Figure 38. DSS-24 (Goldstone) K-Band RCP System Temperature versus Elevation Angle, K-only Mode (S/K Dichroic Retracted), 26000 MHz

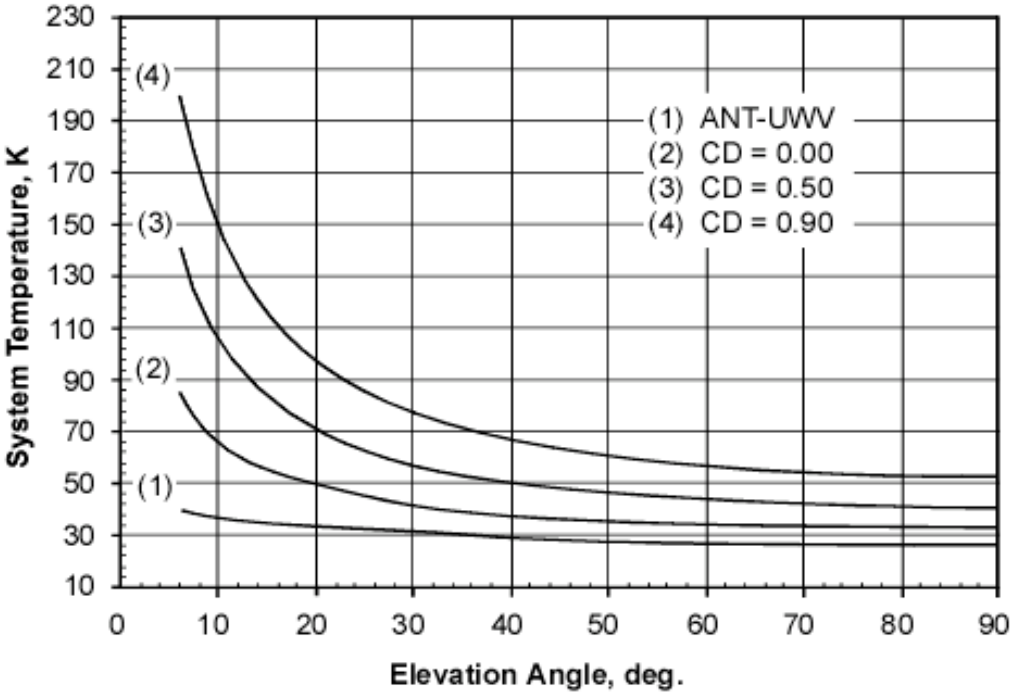

Figure 39. DSS-34 (Canberra) K-Band RCP System Temperature versus Elevation Angle, K-only Mode (S/K Dichroic Retracted), 26000 MHz

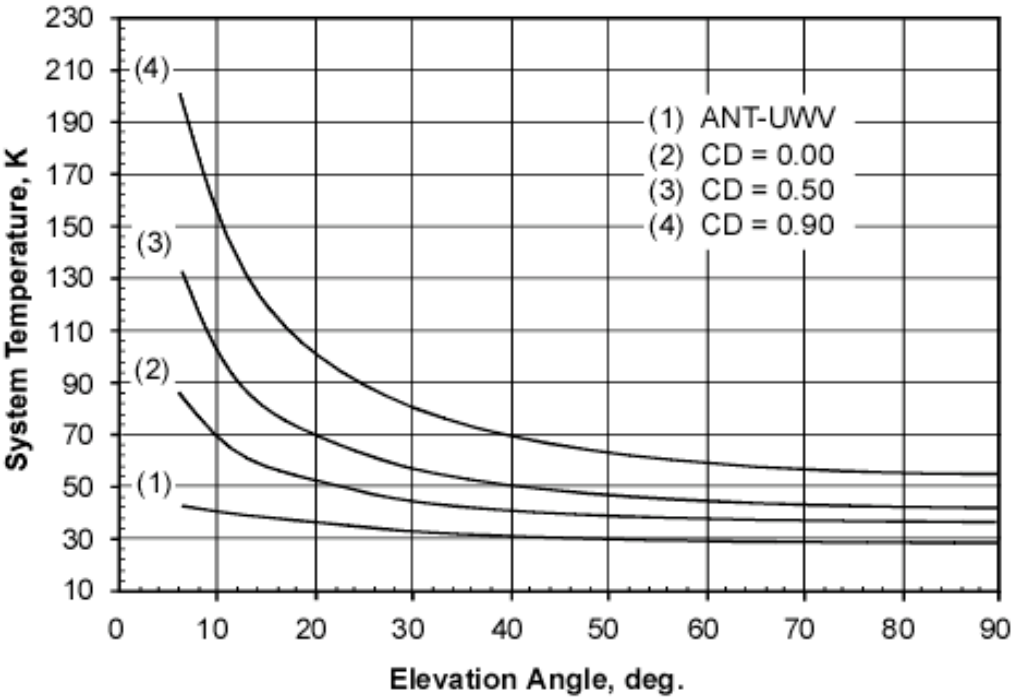

Figure 40. DSS-54 (Madrid) K-Band RCP System Temperature versus Elevation Angle, K-only Mode (S/K Dichroic Retracted), 26000 MHz

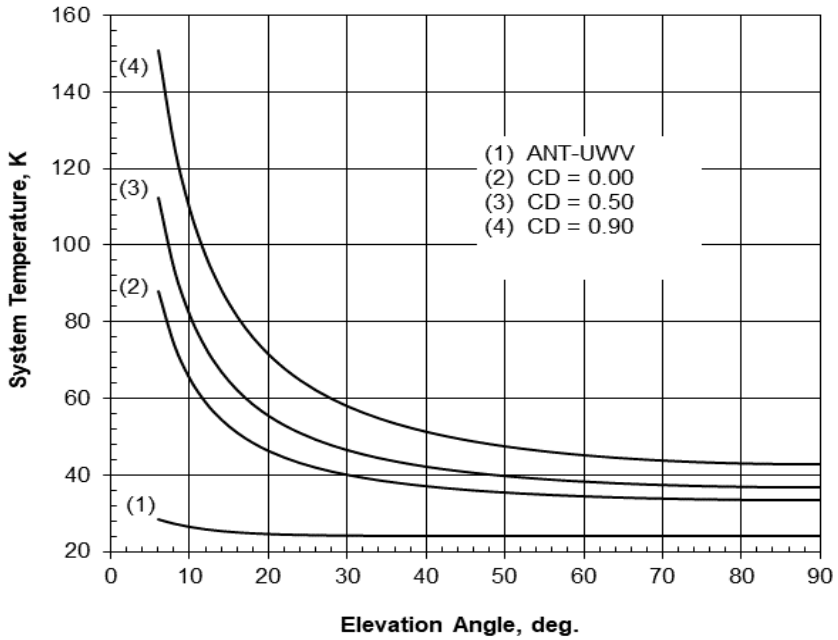

Figure 41. DSS-25 (Goldstone) Ka-Band RCP System Temperature versus Elevation Angle, X/Ka-Mode, 32000 MHz

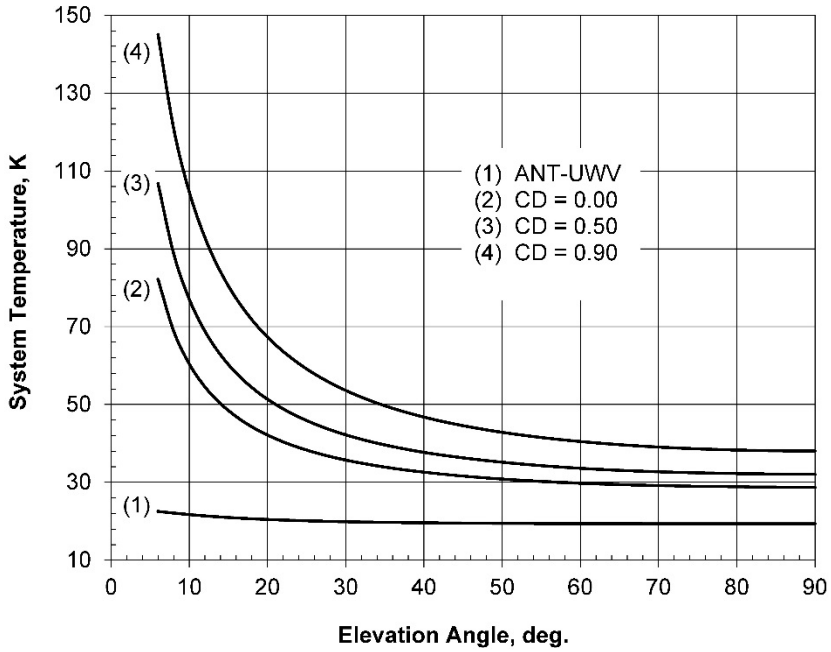

Figure 42. DSS-26 (Goldstone) Ka-Band RCP System Temperature versus Elevation Angle, X/Ka-Mode, 32000 MHz

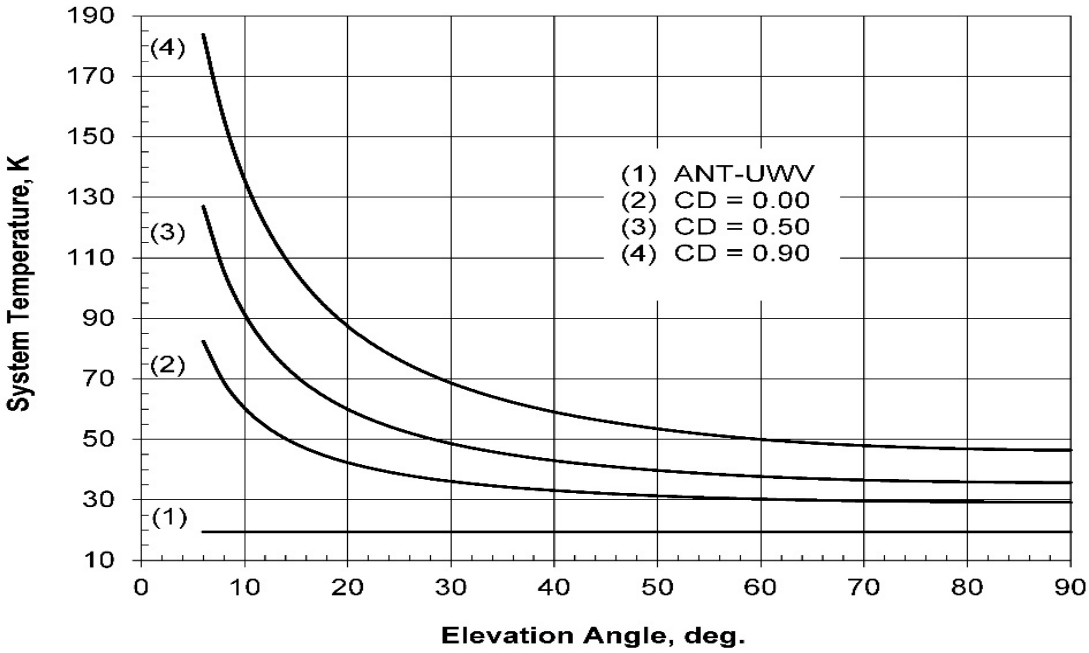

Figure 43. DSS-34 (Canberra) Ka-Band RCP System Temperature versus Elevation Angle, X/Ka-Mode, 32000 MHz

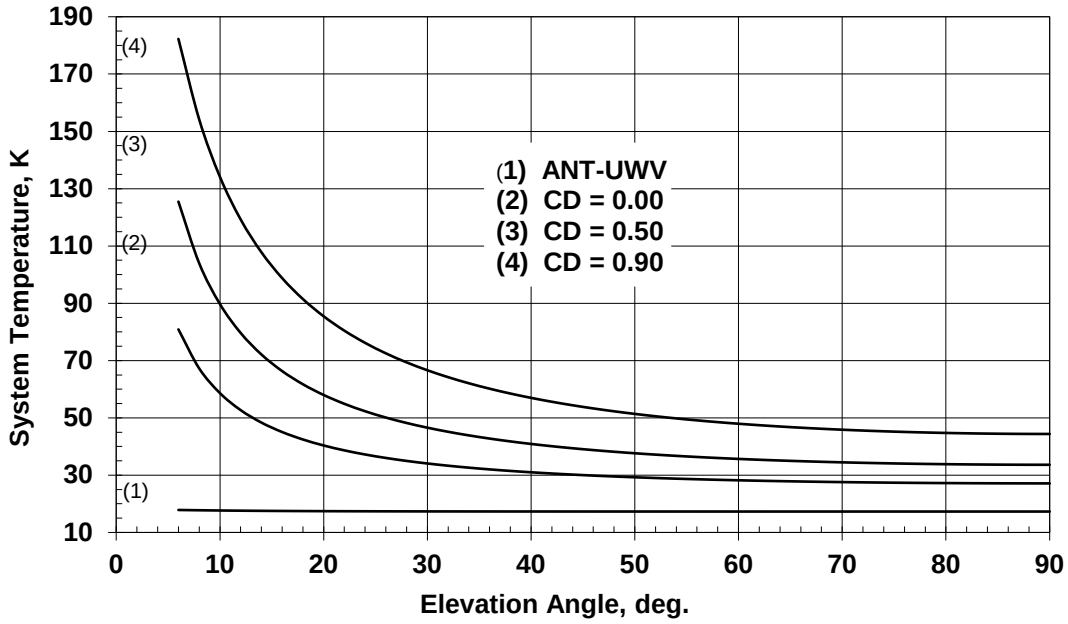

Figure 44. DSS-35 (Canberra) Ka-Band RCP System Temperature versus Elevation Angle, X/Ka-Mode, 32000 MHz

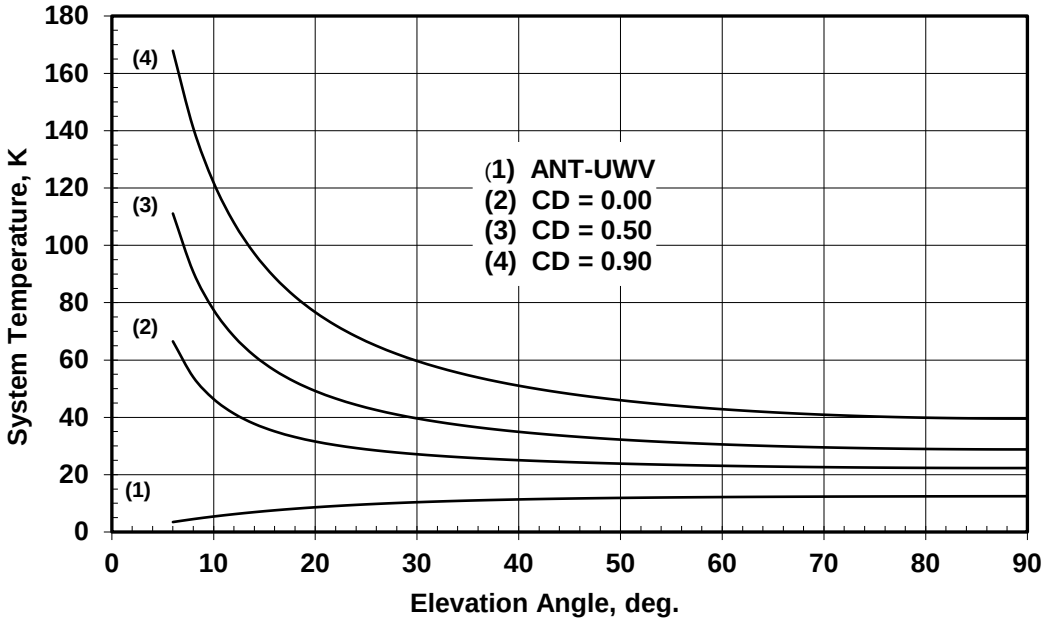

Figure 45. DSS-36 (Canberra) Ka-Band RCP System Temperature versus Elevation Angle, X/Ka-Mode, 32000 MHz

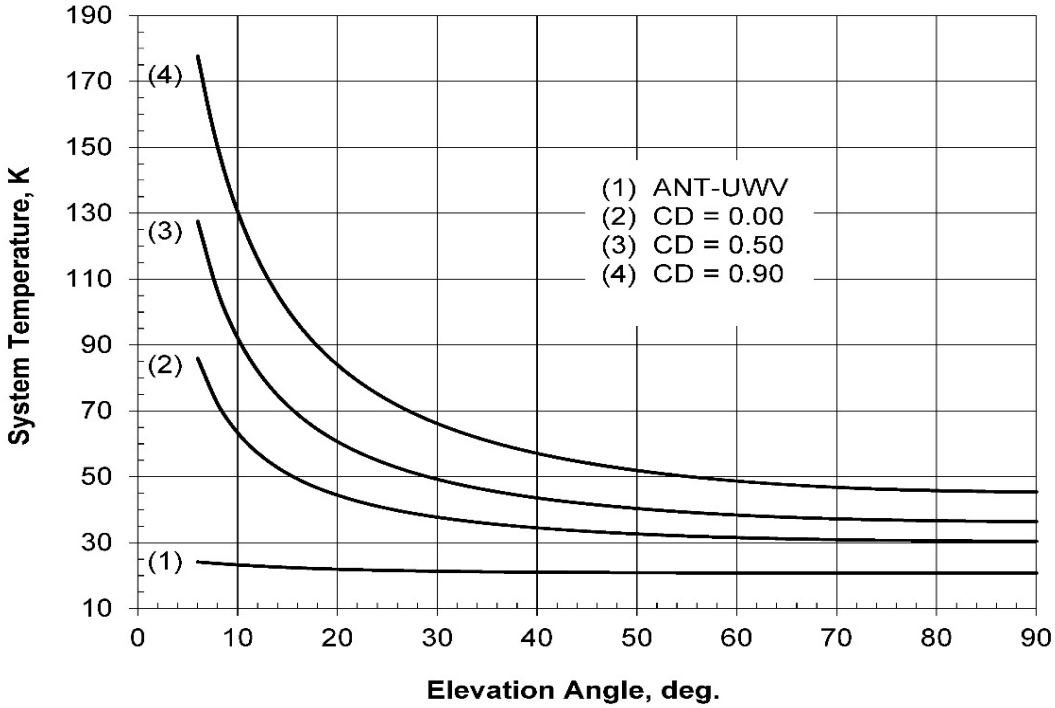

Figure 46. DSS-55 (Madrid) Ka-Band RCP System Temperature versus Elevation Angle, X/Ka-Mode, 32000 MHz

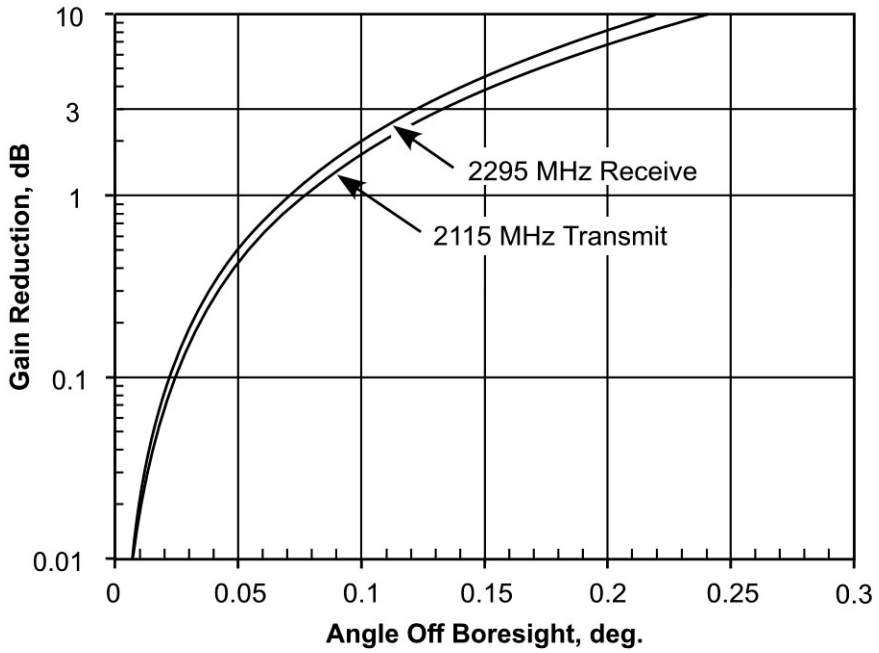

Figure 47. S-Band Gain Reduction versus Angle off Boresight

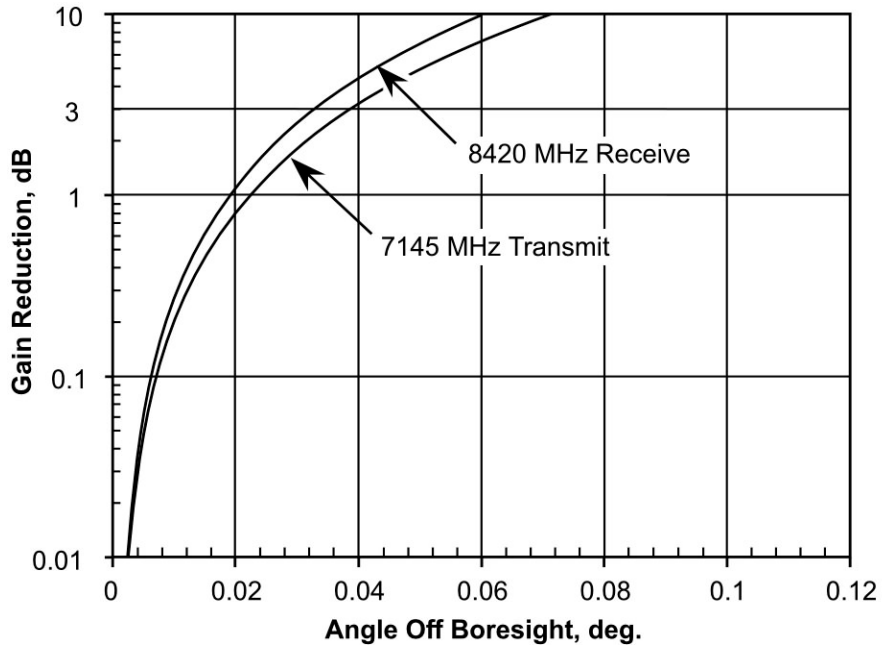

Figure 48. X-Band Gain Reduction versus Angle off Boresight

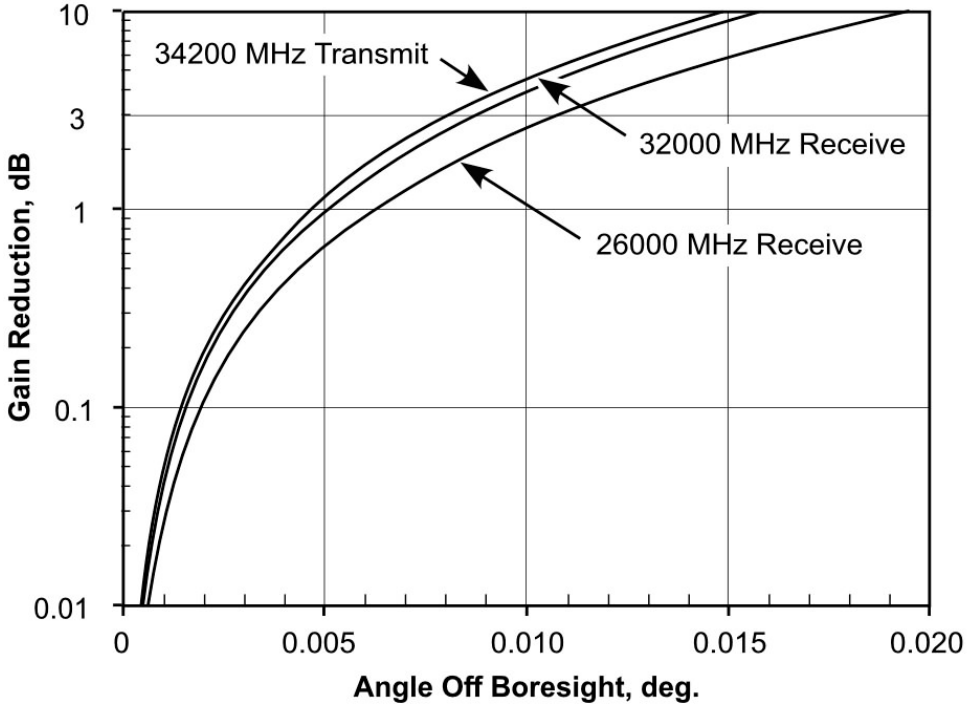

Figure 49. K- and Ka-Band Gain Reduction versus Angle off Boresight

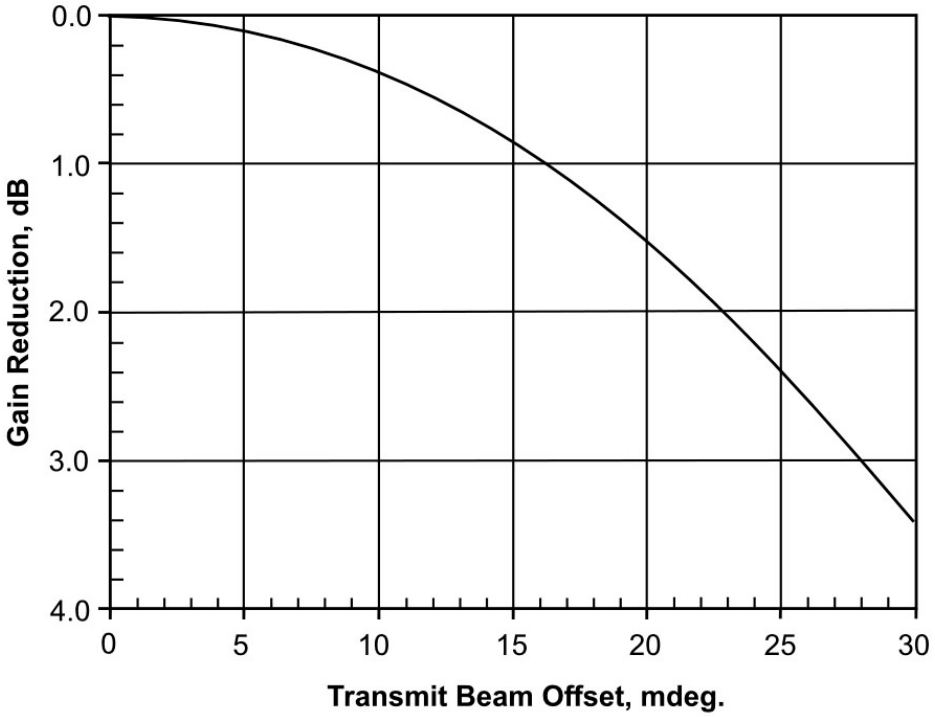

Figure 50. Ka-Band Transmit Gain Reduction Due to Aberration Correction

Appendix A
Equations for Modeling

A.1 Equations for Gain Versus Elevation Angle

The following equation can be used to generate S-, X-, K-, and Ka-band transmit and receive gain versus elevation angle curves. Examples of these curves for selected stations and configurations are shown in Figures 13–29. See paragraph 2.1.1.1 for frequency effect modeling and module 105 for atmospheric attenuation at weather conditions other than 0%, 50%, and 90% cumulative distribution.

$$G(\theta) = G_0 - G_1(\theta - \gamma)^2 - \frac{A_{zen}}{\sin\theta}, \text{ dBi} \tag{A-1}$$

where

θ	=	antenna elevation angle (deg.) $6 \le \theta \le 90$
G_0, G_1, γ	=	parameters from Table A-1 through Table A-4
A_{zen}	=	zenith atmospheric attenuation, dB, from this module, Table A-5 (Module 105, Rev. E), or from Tables 10 through 21 in module 105

A.2 Equations for System Temperature Versus Elevation Angle

The following equation can be used to generate S-, X, and Ka-band system temperature versus elevation angle curves. Examples of these curves are shown in Figures 30-46. See module 105 for atmospheric attenuation at weather conditions other than 0%, 50%, and 90% cumulative distribution.

System operating noise temperature:

$$T_{op}(\theta) = T_{AMW} + T_{sky} \tag{A2}$$

Antenna-Microwave noise contribution:

$$T_{AMW} = T_1 + T_2 e^{-a\theta} \tag{A3}$$

Sky noise contribution:

$$T_{sky} = T_{atm}(\theta) + T'_{CMB}(\theta) \tag{A4}$$

Atmospheric attenuation:

$$A(\theta) = \frac{A_{zen}}{\sin(\theta)}, \text{ dB} \tag{A5}$$

Atmospheric loss factor:

$$L(\theta) = 10^{\frac{A(\theta)}{10}}, \text{ dimensionless, } >1.0 \tag{A6}$$

Atmosphere mean physical temperature:

$$T_p = 255 + 25 \times CD, \text{ K} \tag{A7}$$

Atmospheric noise contribution:

$$T_{atm}(\theta) = T_p\left[1 - \frac{1}{L(\theta)}\right], \text{ K} \tag{A8}$$

Effective cosmic background noise:

$$T'_{CMB}(\theta) = \frac{T_{CMB}}{L(\theta)}, \text{ K} \tag{A9}$$

where

θ	=	antenna elevation angle (deg.), $6 \le \theta \le 90$
T_1, T_2, a	=	antenna-microwave noise temperature parameters from Tables A-1 through A-4
A_{zen}	=	zenith atmospheric attenuation, dB, from this module, Table A-5 (Module 105, Rev. E), or from Tables 10−21 in Module 105 as a function of frequency, station, and cumulative distribution (CD)
CD	=	cumulative distribution, $0 \le CD \le 0.99$, used to select A_{ZEN} from Table A-5 or from Tables 10−21 in Module 105
T_{CMB}	=	2.725 K, cosmic microwave background noise temperature

A.3 Equation for Gain Reduction Versus Pointing Error

The following equation can be used to generate gain reduction versus pointing error curves examples of which are depicted in Figures 47−49.

$$\Delta G(\theta) = 10\log\left(e^{\frac{2.773\theta^2}{HPBW^2}}\right), \text{ dB} \qquad \text{(A-3)}$$

where

θ	=	pointing error, deg
$HPBW$	=	half-power beamwidth (from Tables 2−7)

A.4 Equation for Transmit Aberration Gain Reduction

The following equation can be used to generate the Ka-band transmit gain reduction curve depicted in Figure 50.

$$\Delta G(\phi) = -0.0038\phi^2, \text{ dB} \qquad \text{(A-4)}$$

where

ϕ	=	transmit beam offset, mdeg

Table A-1. S-Band Vacuum Gain and Antenna-Microwave Noise Temperature Parameters, Referenced to Feedhorn Aperture

Station and Configuration	Vacuum Gain Parameters				Antenna-Microwave Noise Temperature Parameters			Figures
	G_0 Transmit	G_0 Receive	G_1	γ	T_1	T_2	a	
DSS-24 (Goldstone)								
S/X or S/K, HEMT-1, RCP or LCP, Non-Diplexed	-	56.87	0.000032	90.0	26.04	5.2	0.05	
S/X or S/K, HEMT-1, RCP or LCP, Diplexed	56.20	56.87	0.000032	90.0	33.41	5.6	0.05	
DSS-26 (Goldstone)								
S/X or S/K, HEMT-1, RCP or LCP, Non-Diplexed	-	56.56	0.000033	63.9	17.6	14	0.11	
S/X or S/K, HEMT-1, RCP or LCP, Diplexed, Near-Earth Band	55.89	56.56	0.000033	63.9	23.4	14	0.11	N/A for deep space
DSS-34 (Canberra)								
S/X or S/K, HEMT-1, RCP or LCP, Non-Diplexed	-	56.83	0.000042	43.19	24.88	20.0	0.16	Figure 13 Figure 30
S/X or S/K, HEMT-1, RCP or LCP, Diplexed	56.16	56.83	0.000042	43.19	34.46	20.0	0.16	
DSS-36 (Canberra)								
S/X or S/K, HEMT-1, RCP or LCP, Non-Diplexed	-	56.63	0.000042	45.00	21.57	28.0	0.20	
S/X or S/K, HEMT-1, RCP or LCP, Diplexed, Near-Earth Band	55.96	56.63	0.000042	45.00	30.43	28.0	0.20	N/A for deep space
DSS-54 (Madrid)								
S/X or S/K, HEMT-1, RCP or LCP, Non-Diplexed	-	56.83	0.000042	45.00	25.72	12.0	0.08	
S/X or S/K, HEMT-1, RCP or LCP, Diplexed	56.16	56.83	0.000042	45.00	35.34	12.0	0.08	N/A for deep space
DSS-56 (Madrid)								
S/X or S/K, HEMT-1, RCP or LCP, Non-Diplexed	-	56.76	0.000037	40.92	20.63	20.0	0.15	
S/X or S/K, HEMT-1, RCP or LCP, Diplexed	56.09	56.76	0.000037	40.92	27.33	20.0	0.15	N/A for deep space

NOTES:

Figures referenced are typically for highest performance configuration for each stated antenna. See Sections 2.1.1.2 and 2.1.2.

Values in above table are for S-band deep-space uplink (transmit) and downlink (receive) frequencies.

Nominal S-band deep-space uplink frequency is 2115 MHz.
Nominal S-band deep-space downlink frequency is 2295 MHz.
Nominal S-band near-earth uplink frequency is 2067.5 MHz.
Nominal S-band near-earth downlink frequency is 2245 MHz.

For near-earth uplink G_0 gain, reduce above G_0 transmit gains by 0.19 dB.
For near-earth downlink G_0 gain, reduce above G_0 receive gains by 0.19 dB.

DSS-26, DSS-36, and DSS-56 not available for S-band deep-space uplink due to low transmit power (250 W). DSS-54 and DSS-56 not available for S-band deep-space uplink due to frequency restriction.

Table A-2. X-Band Vacuum Gain and Antenna-Microwave Noise Temperature Parameters, Referenced to Feedhorn Aperture

Station and Configuration	Vacuum Gain Parameters				Antenna-Microwave Noise Temperature Parameters			Figures
	G_0 Transmit	G_0 Receive	G_1	γ	T_1	T_2	a	
DSS-23 (Goldstone)								
X/Ka, HEMT-1, RCP, Diplexed	TBD	TBD			TBD			
X/Ka, HEMT-2, LCP, Diplexed	TBD	TBD			TBD			
DSS-24 (Goldstone)								
X-Only, MASER-1, RCP or LCP, Non-Diplexed	-	68.24	0.000027	51.50	21.28	1.5	0.11	
X-Only, MASER-1, RCP or LCP, Diplexed	66.88	68.24	0.000027	51.50	30.39	2.9	0.11	
S/X, MASER-1, RCP or LCP, Non-Diplexed	-	68.19	0.000027	51.50	22.72	1.5	0.11	
S/X, MASER-1, RCP or LCP, Diplexed	N/A	68.19	0.000027	51.50	31.89	2.9	0.11	
DSS-25 (Goldstone)								
X/Ka, HEMT-1, RCP, Diplexed	66.86	68.22	0.000047	42.44	16.2	12.0	0.2	Figure 14 Figure 31
X/Ka, HEMT-2, LCP, Diplexed	66.86	68.22	0.000047	42.44	16.0	12.0	0.2	
DSS-26 (Goldstone)								
X/Ka, HEMT-1, RCP, Diplexed	66.93	68.29	0.000059	42.46	16.29	5.2	0.08	Figure 15 Figure 32
X/Ka, HEMT-2, LCP, Diplexed	66.93	68.29	0.000059	42.46	15.43	5.2	0.08	
S/X, HEMT-1, RCP, Diplexed	N/A	68.24	0.000059	42.46	18.01	5.2	0.08	
S/X, HEMT-2, LCP, Diplexed	N/A	68.24	0.000059	42.46	17.15	5.2	0.08	
DSS-33 (Canberra)								
X/Ka, HEMT-1, RCP, Diplexed	TBD	TBD			TBD			
X/Ka, HEMT-2, LCP, Diplexed	TBD	TBD			TBD			
DSS-34 (Canberra)								
X/Ka, HEMT-1, RCP, Diplexed	66.97	68.33	0.000045	48.64	16.28	5.0	0.15	Figure 16 Figure 33
X/Ka, HEMT-2, LCP, Diplexed	66.97	68.33	0.000045	48.64	16.71	5.0	0.15	
S/X, HEMT-1, RCP, Diplexed	N/A	68.28	0.000045	48.64	17.99	5.0	0.15	

Table A-2. X-Band Vacuum Gain and Antenna-Microwave Noise Temperature Parameters, Referenced to Feedhorn Aperture (continued)

Station and Configuration	Vacuum Gain Parameters				Antenna-Microwave Noise Temperature Parameters			Figures
	G_0 Transmit	G_0 Receive	G_1	γ	T_1	T_2	a	
S/X, HEMT-2, LCP, Diplexed	N/A	68.28	0.000045	48.64	18.43	5.0	0.15	
DSS-35 (Canberra)								
X/Ka, HEMT-1, RCP, Diplexed	66.99	68.35	0.000045	45.00	14.7	0.0	0.00	Figure 17 Figure 34
X/Ka, HEMT-2, LCP, Diplexed	66.99	68.35	0.000045	45.00	15.0	0.0	0.00	
DSS-36 (Canberra)								
X/Ka, HEMT-1, RCP, Diplexed	66.98	68.34	0.000045	45.00	12.59	15.0	0.20	Figure 18 Figure 35
X/Ka, HEMT-2, LCP Diplexed	66.98	68.34	0.000045	45.00	13.95	12.0	0.20	
S/X, HEMT-1, RCP, Diplexed	N/A	68.29	0.000045	45.00	14.31	15.0	0.20	
S/X, HEMT-2, LCP, Diplexed	N/A	68.29	0.000045	45.00	15.67	12.0	0.20	
DSS-53 (Madrid)								
X/Ka, HEMT-1, RCP, Diplexed	TBD	TBD			TBD			
X/Ka, HEMT-2, LCP, Diplexed	TBD	TBD			TBD			
DSS-54 (Madrid)								
X/Ka, HEMT-1, RCP, Diplexed	67.01	68.37	0.000058	45.25	18.31	11.0	0.15	Figure 19 Figure 36
X/Ka, HEMT-2, LCP, Diplexed	67.01	68.37	0.000058	45.25	18.31	11.0	0.15	
S/X, HEMT-1, RCP, Diplexed	N/A	68.32	0.000058	45.25	20.03	11.0	0.15	
S/X, HEMT-2, LCP, Diplexed	N/A	68.32	0.000058	45.25	20.03	11.0	0.15	
DSS-55 (Madrid)								
X/Ka, HEMT-1, RCP, Diplexed	66.98	68.34	0.000035	43.55	17.42	13.2	0.15	Figure 20 Figure 37
X/Ka, HEMT-2, LCP, Diplexed	66.98	68.34	0.000035	43.55	17.82	13.2	0.15	
DSS-56 (Madrid)								

Table A-2. X-Band Vacuum Gain and Antenna-Microwave Noise Temperature Parameters, Referenced to Feedhorn Aperture (continued)

Station and Configuration	Vacuum Gain Parameters				Antenna-Microwave Noise Temperature Parameters			Figures
	G_0 Transmit	G_0 Receive	G_1	γ	T_1	T_2	a	
S/X, HEMT-2, LCP, Diplexed	N/A	68.28	0.000045	48.64	18.43	5.0	0.15	
DSS-35 (Canberra)								
X/Ka, HEMT-1, RCP, Diplexed	66.99	68.35	0.000045	45.00	14.7	0.0	0.00	Figure 17 Figure 34
X/Ka, HEMT-2, LCP, Diplexed	66.99	68.35	0.000045	45.00	15.0	0.0	0.00	
DSS-36 (Canberra)								
X/Ka, HEMT-1, RCP, Diplexed	66.98	68.34	0.000045	45.00	12.59	15.0	0.20	Figure 18 Figure 35
X/Ka, HEMT-2, LCP Diplexed	66.98	68.34	0.000045	45.00	13.95	12.0	0.20	
S/X, HEMT-1, RCP, Diplexed	N/A	68.29	0.000045	45.00	14.31	15.0	0.20	
S/X, HEMT-2, LCP, Diplexed	N/A	68.29	0.000045	45.00	15.67	12.0	0.20	
DSS-53 (Madrid)								
X/Ka, HEMT-1, RCP, Diplexed	TBD	TBD			TBD			
X/Ka, HEMT-2, LCP, Diplexed	TBD	TBD			TBD			
X/Ka, HEMT-1, RCP, Diplexed		68.11	0.000054	49.94	14.47	-0.9	0.05	
X/Ka, HEMT-2, LCP, Diplexed		68.11	0.000054	49.94	13.96	-0.9	0.05	
S/X, HEMT-1, RCP, Diplexed	N/A	68.06	0.000054	49.94	16.19	-0.9	0.05	
S/X, HEMT-2, LCP, Diplexed	N/A	68.06	0.000054	49.94	15.68	-0.9	0.05	

NOTES:

Figures referenced are typically for highest performance configuration for each stated antenna. See Sections 2.1.1.2 and 2.1.2.

Values in above table are for X-band deep-space uplink (transmit) and downlink (receive) frequencies.

Nominal X-band deep-space uplink frequency is 7167.5 MHz.
Nominal X-band deep-space downlink frequency is 8425 MHz.
Nominal X-band near-earth uplink frequency is 7212.5 MHz.

Nominal X-band near-earth downlink frequency is 8475 MHz.

For near-earth uplink G_0 gain, increase above G_0 transmit gains by 0.05 dB.
For near-earth downlink G_0 gain, increase above G_0 receive gains by 0.05 dB.
For low-gain mode add +20 K to T_1 values (X-band).

X-band uplink not available in S/X mode, with S/X dichroic extended.

Table A-3. K-Band Vacuum Gain and Antenna-Microwave Noise Temperature Parameters, Referenced to Feedhorn Aperture

Station and Configuration	Vacuum Gain Parameters			Antenna-Microwave Noise Temperature Parameters			Figures
	G_0 Receive	G_1	▯	T_1	T_2	*a*	
DSS-24 (Goldstone)							
K-only, HEMT-1, RCP, 25.5 GHz, Non-Diplexed	77.03	0.00029	45.0	19.6	19.6	0.05	
K-only, HEMT-2, LCP, 25.5 GHz, Non-Diplexed	77.03	0.00029	45.0	27.1	19.6	0.05	
S/K, HEMT-1, RCP, 25.5 GHz, Non-Diplexed	76.99	0.00029	45.0	30.3	20.4	0.065	
S/K, HEMT-2, LCP, 25.5 GHz, Non-Diplexed	76.99	0.00029	45.0	37.8	20.4	0.065	
K-only, HEMT-1, RCP, 26.0 GHz, Non-Diplexed	77.20	0.00029	45.0	17.5	19.6	0.05	Figure 21 Figure 38
K-only, HEMT-2, LCP, 26.0 GHz, Non-Diplexed	77.20	0.00029	45.0	23.5	19.6	0.05	
S/K, HEMT-1, RCP, 26.0 GHz, Non-Diplexed	77.16	0.00029	45.0	23.5	20.4	0.065	
S/K, HEMT-2, LCP, 26.0 GHz, Non-Diplexed	77.16	0.00029	45.0	29.5	20.4	0.065	
K-only, HEMT-1, RCP, 27.0 GHz, Non-Diplexed	77.53	0.00029	45.0	20.8	19.6	0.05	
K-only, HEMT-2, LCP, 27.0 GHz, Non-Diplexed	77.53	0.00029	45.0	25.4	19.6	0.05	
S/K, HEMT-1, RCP, 27.0 GHz, Non-Diplexed	77.49	0.00029	45.0	30.5	20.4	0.065	
S/K, HEMT-2, LCP, 27.0 GHz, Non-Diplexed	77.49	0.00029	45.0	35.1	20.4	0.065	
DSS-26 (Goldstone)							
K-only, HEMT-1, RCP, 26.0 GHz, Non-Diplexed	TBD			TBD			
K-only, HEMT-2, LCP, 26.0 GHz, Non-Diplexed	TBD			TBD			
S/K, HEMT-1, RCP, 26.0 GHz, Non-Diplexed	TBD			TBD			
S/K, HEMT-2, LCP, 26.0 GHz, Non-Diplexed	TBD			TBD			

Table A-3. K-Band Vacuum Gain and Antenna-Microwave Noise Temperature Parameters, Referenced to Feedhorn Aperture (continued)

Station and Configuration	Vacuum Gain Parameters			Antenna-Microwave Noise Temperature Parameters			Figures
	G_0 Receive	G_1	γ	T_1	T_2	a	
DSS-34 (Canberra)							
K-only, HEMT-1, RCP, 25.5 GHz, Non-Diplexed	77.02	0.00029	48.0	24.9	19.6	0.05	
K-only, HEMT-2, LCP, 25.5 GHz, Non-Diplexed	77.02	0.00029	48.0	26.3	19.6	0.05	
S/K, HEMT-1, RCP, 25.5 GHz, Non-Diplexed	76.98	0.00029	48.0	35.6	20.4	0.065	
S/K, HEMT-2, LCP, 25.5 GHz, Non-Diplexed	76.98	0.00029	48.0	37.0	20.4	0.065	
K-only, HEMT-1, RCP, 26.0 GHz, Non-Diplexed	77.19	0.00029	48.0	25.3	19.6	0.05	Figure 22 Figure 39
K-only, HEMT-2, LCP, 26.0 GHz, Non-Diplexed	77.19	0.00029	48.0	25.4	19.6	0.05	
S/K, HEMT-1, RCP, 26.0 GHz, Non-Diplexed	77.15	0.00029	48.0	31.3	20.4	0.065	
S/K, HEMT-2, LCP, 26.0 GHz, Non-Diplexed	77.15	0.00029	48.0	31.4	20.4	0.065	
K-only, HEMT-1, RCP, 27.0 GHz, Non-Diplexed	77.52	0.00029	48.0	23.7	19.6	0.05	
K-only, HEMT-2, LCP, 27.0 GHz, Non-Diplexed	77.52	0.00029	48.0	24.5	19.6	0.05	
S/K, HEMT-1, RCP, 27.0 GHz, Non-Diplexed	77.48	0.00029	48.0	33.4	20.4	0.065	
S/K, HEMT-2, LCP, 27.0 GHz, Non-Diplexed	77.48	0.00029	48.0	34.2	20.4	0.065	
DSS-36 (Canberra)							
K-only, HEMT-1, RCP, 26.0 GHz, Non-Diplexed	TBD			TBD			
K-only, HEMT-2, LCP, 26.0 GHz, Non-Diplexed	TBD			TBD			

Table A-3. K-Band Vacuum Gain and Antenna-Microwave Noise Temperature Parameters, Referenced to Feedhorn Aperture (continued)

Station and Configuration	Vacuum Gain Parameters			Antenna-Microwave Noise Temperature Parameters			Figures
	G_0 Receive	G_1	γ	T_1	T_2	a	
S/K, HEMT-1, RCP, 26.0 GHz, Non-Diplexed	TBD			TBD			
S/K, HEMT-2, LCP, 26.0 GHz, Non-Diplexed	TBD			TBD			
DSS-54 (Madrid)							
K-only, HEMT-1, RCP, 25.5 GHz, Non-Diplexed	77.02	0.00029	45.0	28.2	19.6	0.05	
K-only, HEMT-2, LCP, 25.5 GHz, Non-Diplexed	77.02	0.00029	45.0	30.7	19.6	0.05	
S/K, HEMT-1, RCP, 25.5 GHz, Non-Diplexed	76.98	0.00029	45.0	38.9	20.4	0.065	
S/K, HEMT-2, LCP, 25.5 GHz, Non-Diplexed	76.98	0.00029	45.0	41.4	20.4	0.065	
K-only, HEMT-1, RCP, 26.0 GHz, Non-Diplexed	77.19	0.00029	45.0	28.1	19.6	0.05	Figure 23 Figure 40
K-only, HEMT-2, LCP, 26.0 GHz, Non-Diplexed	77.19	0.00029	45.0	29.0	19.6	0.05	
S/K, HEMT-1, RCP, 26.0 GHz, Non-Diplexed	77.15	0.00029	45.0	34.1	20.4	0.065	
S/K, HEMT-2, LCP, 26.0 GHz, Non-Diplexed	77.15	0.00029	45.0	35.0	20.4	0.065	
K-only, HEMT-1, RCP, 27.0 GHz, Non-Diplexed	77.52	0.00029	45.0	26.7	19.6	0.05	
K-only, HEMT-2, LCP, 27.0 GHz, Non-Diplexed	77.52	0.00029	45.0	26.6	19.6	0.05	
S/K, HEMT-1, RCP, 27.0 GHz, Non-Diplexed	77.48	0.00029	45.0	36.4	20.4	0.065	
S/K, HEMT-2, LCP, 27.0 GHz, Non-Diplexed	77.48	0.00029	45.0	36.3	20.4	0.065	
DSS-56 (Madrid)							
K-only, HEMT-1, RCP, 26.15 GHz, Non-Diplexed	77.57	0.00066	34.37	33.8	28.5	0.075	
K-only, HEMT-2, LCP, 26.15 GHz, Non-Diplexed	77.57	0.00066	34.37	33.8	28.5	0.075	

Table A-3. K-Band Vacuum Gain and Antenna-Microwave Noise Temperature Parameters, Referenced to Feedhorn Aperture (continued)

Station and Configuration	Vacuum Gain Parameters			Antenna-Microwave Noise Temperature Parameters			Figures
	G_0 Receive	G_1	γ	T_1	T_2	a	
S/K, HEMT-1, RCP, 26.15 GHz, Non-Diplexed	77.53	0.00066	34.37	39.8	28.5	0.075	
S/K, HEMT-2, LCP, 26.15 GHz, Non-Diplexed	77.53	0.00066	34.37	39.8	28.5	0.075	

NOTES:

Figures referenced are typically for highest performance configuration for each stated antenna. See Sections 2.1.1.2 and 2.1.2.

Values in above table are for K-band near-earth downlink (receive) frequencies.

Nominal K-band near-earth downlink frequency is 26250 MHz.

For low-gain mode add +180 K to T_1 values (K-band).

K-band available at DSS-26 (12/2022) and at DSS-36 (2/2022).

Table A-4. Ka-Band Vacuum Gain and Antenna-Microwave Noise Temperature Parameters, Referenced to Feedhorn Aperture

Station and Configuration	Vacuum Gain Parameters				Antenna-Microwave Noise Temperature Parameters			Figures
	G_0 Transmit	G_0 Receive	G_1	▱	T_1	T_2	*a*	
DSS-23 (Goldstone)								
X/Ka, HEMT-1, RCP, Non-Diplexed	-	TBD			TBD			
X/Ka, HEMT-2, RCP-error, Non-Diplexed	-	-	-	-	TBD			
X/Ka, HEMT-3, LCP, Non-Diplexed	-	TBD			TBD			
DSS-25 (Goldstone)								
X/Ka, HEMT-1, RCP, Diplexed	79.03	78.40	0.00036	53.83	24.2	10.0	0.15	Figure 24 Figure 41
X/Ka, HEMT-2, RCP-error, Diplexed	-	-	-	-	25.7	10.0	0.15	
X/Ka, HEMT-3, LCP, Diplexed	79.03	78.40	0.00036	53.83	23.0	10.0	0.15	
DSS-26 (Goldstone)								
X/Ka, HEMT-1, RCP, Non-Diplexed	-	79.13	0.00022	44.38	19.35	5.0	0.075	Figure 25 Figure 42
X/Ka, HEMT-2, RCP-error, Non-Diplexed	-	-	-	-	24.54	5.0	0.075	
X/Ka, HEMT-3, LCP, Non-Diplexed	-	79.13	0.00022	44.38	20.76	5.0	0.075	
DSS-33 (Canberra)								
X/Ka, HEMT-1, RCP, Non-Diplexed	-	TBD			TBD			
X/Ka, HEMT-2, RCP-error, Non-Diplexed	-	-	-	-	TBD			
X/Ka, HEMT-3, LCP, Non-Diplexed	-	TBD			TBD			
DSS-34 (Canberra)								
X/Ka, HEMT-1, RCP, Non-Diplexed	-	78.98	0.00031	44.30	19.38	0.0	0.000	Figure 26 Figure 43
X/Ka, HEMT-2, RCP-error, Non-Diplexed	-	-	-	-	23.25	0.0	0.000	
X/Ka, HEMT-3, LCP, Non-Diplexed	-	78.98	0.00031	44.30	19.61	0.0	0.000	
DSS-35 (Canberra)								
X/Ka, HEMT-1, RCP, Diplexed (8/2026)	TBD	79.27	0.00031	45.00	17.3	1.0	0.1	Figure 27 Figure 44
X/Ka, HEMT-2, RCP-error, Diplexed (8/2026)	-	-	-	-	not measured			
X/Ka, HEMT-3, LCP, Diplexed (8/2026)	TBD	79.27	0.00031	45.00	17.2	1.0	0.1	

Table A-4. Ka-Band Vacuum Gain and Antenna-Microwave Noise Temperature Parameters, Referenced to Feedhorn Aperture (continued)

Station and Configuration	Vacuum Gain Parameters				Antenna-Microwave Noise Temperature Parameters			Figures
	G_0 Transmit	G_0 Receive	G_1	γ	T_1	T_2	a	
DSS-36 (Canberra)								
X/Ka, HEMT-1, RCP, Non-Diplexed	-	79.34	0.00060	47.52	12.54	-13.0 See Note	0.060	Figure 28 Figure 45
X/Ka, HEMT-2, RCP-error, Non-Diplexed	-	-	-	-	Not measured			
X/Ka, HEMT-3, LCP, Non-Diplexed	-	79.34	0.00060	47.52	12.18	-12.8 See note	0.060	
DSS-53 (Madrid)								
X/Ka, HEMT-1, RCP, Non-Diplexed	-	TBD			TBD			
X/Ka, HEMT-2, RCP-error, Non-Diplexed	-	-	-	-	TBD			
X/Ka, HEMT-3, LCP, Non-Diplexed	-	TBD			TBD			
DSS-54 (Madrid)								
X/Ka, HEMT-1, RCP, Non-Diplexed	-	78.38	0.00020	45.00	21.80	0.0	0.000	
X/Ka, HEMT-2, RCP-error, Non-Diplexed	-	-	-	-	25.00	0.0	0.000	
X/Ka, HEMT-3, LCP, Non-Diplexed	-	78.38	0.00020	45.00	21.80	0.0	0.000	
DSS-55 (Madrid)								
X/Ka, HEMT-1, RCP, Diplexed (5/2027)	TBD	79.13	0.00022	45.00	20.79	5.3	0.076	Figure 29 Figure 46
X/Ka, HEMT-2, RCP-error, Diplexed (5/2027)	-	-	-	-	21.97	5.3	0.076	
X/Ka, HEMT-3, LCP, Diplexed (5/2027)	TBD	79.13	0.00022	45.00	19.82	5.3	0.076	
DSS-56 (Madrid)								
X/Ka, HEMT-1, RCP, Non-Diplexed	-	79.01	0.0011	43.24	16.5	-5.0	0.2	
X/Ka, HEMT-2, RCP-error, Non-Diplexed	-	-	-	-	Not measured			
X/Ka, HEMT-3, LCP, Non-Diplexed	-	79.01	0.0011	43.24	17.0	-5.0	0.2	

NOTES:

Figures referenced are typically for highest performance configuration for each stated antenna. See Sections 2.1.1.2 and 2.1.2.

Values in above table are for Ka-band deep-space uplink (transmit) and downlink (receive) frequencies.

Nominal Ka-band deep-space uplink frequency is 34450 MHz.
Nominal Ka-band deep-space downlink frequency is 32050 MHz.

For low-gain mode add +70 K to T_1 values (Ka-band).

Noise temperatures for DSS-35 and DSS-36 RCP-error channels were not measured.

Negative T_2 for DSS-36 is a result of installation of quadripod leg shields. See Section 2.1.2.

Table A-5. S-, X-, K-, and Ka-Band Zenith Atmospheric Attenuation (A_{zen})

Station	A_{zen}, dB (Module 105, Rev. D, 9/2009)			
	Cumulative Distribution = 0.00	Cumulative Distribution = 0.25	Cumulative Distribution = 0.50	Cumulative Distribution = 0.90
S-Band				
Goldstone	0.033	0.033	0.034	0.034
Canberra	0.036	0.036	0.036	0.037
Madrid	0.035	0.035	0.035	0.036
X-Band				
Goldstone	0.037	0.039	0.040	0.047
Canberra	0.039	0.044	0.046	0.058
Madrid	0.038	0.042	0.045	0.055
K-Band				
Goldstone	0.078	0.125	0.150	0.232
Canberra	0.083	0.176	0.212	0.387
Madrid	0.082	0.153	0.186	0.385
Ka-Band				
Goldstone	0.116	0.149	0.167	0.260
Canberra	0.124	0.195	0.229	0.403
Madrid	0.121	0.181	0.217	0.361

NOTE: Table values from earlier Module 105, Rev. D, 9/2009 (immediately above), have been used to generate the curves in Figures 13-46. Latest module 105, Rev. E, values are given below.

Station	A_{zen}, dB (Module 105, Rev. E, 10/2015)			
	Cumulative Distribution = 0.00	Cumulative Distribution = 0.25	Cumulative Distribution = 0.50	Cumulative Distribution = 0.90
S-Band				
Goldstone	0.033	0.033	0.034	0.034
Canberra	0.036	0.036	0.036	0.037
Madrid	0.035	0.035	0.035	0.036
X-Band				
Goldstone	0.037	0.039	0.040	0.045
Canberra	0.039	0.045	0.047	0.057
Madrid	0.038	0.043	0.045	0.058

K-Band				
Goldstone	0.078	0.125	0.150	0.232
Canberra	0.083	0.176	0.212	0.387
Madrid	0.082	0.153	0.186	0.385
Ka-Band				
Goldstone	0.116	0.150	0.171	0.239
Canberra	0.124	0.208	0.238	0.384
Madrid	0.121	0.192	0.221	0.407

NOTE: Table A-5 values from latest Module 105, Rev. E, 10/2015 (immediately above), should be used with the equations in Appendix A.