Deep Space Network

Deep Space Network Services Catalog

Document Owner:

Jeff Berner Date
DSN Project Chief Engineer

Approved by:

Alaudin M. Bhanji Date
DSN Project Manager

Prepared by:

Timothy Pham Date
DSN Chief Systems Engineer

Approved by:

Charles Scott Date
DSN Commitment Office Manager

DSN Document Release Date

DSN No. **820-100, Rev. F**
Issue Date:
JPL D-19002

Jet Propulsion Laboratory
California Institute of Technology

Copyright 2015 California Institute of Technology. U.S. Government sponsorship acknowledged

Document Change Log

Revision	Preparer	Issue Date	Affected Sections or Pages	Change Summary
-	W. Tai	09/03/98	All	Initial issue of document
A	W. Tai	05/19/03		Version 7.5
B	W. Tai	07/03/07	All	Change scope of the Catalog contents to DSN services only.
C	A. Bedrossian	04/29/09	All	• Editorial clarifications and updates • Revised Section 6 to reflect organization change affecting Commitments Office • Addition of 26 GHz capability
D	A. Bedrossian	05/08/09	Section 6.2 Section 6.4	• Deleted CE Role statement in Section 6.2 • Deleted “preliminary information” from Section 6.4
E	A. Bedrossian	12/17/09	All	• Updated document references • Deleted 26 meter antenna capability • Revised Section 6 • Added Relay service • Added Decommitted Capabilities Section • Removed telemetry bit stream service from Telemetry Services description • Removed raw radiometric data service • Added Initial Acquisition Provision • Added editorial clarifications and updates
F	T. Pham	12/15/14		• Added DSS-35 and upcoming DSS-36 antennas • Removed DSS-27 HSB antenna • Added 250W capability at DSS-15 • Added the upcoming 80 kW transmitter at DSS-26 • Changed DSS-25 deep space Ka-band uplink corresponding to 300 W transmitter • Updated antenna performance specifications (e.g., G/T, frequencies, EIRP) for better commonality • Added restriction on deep space S-band (2110-2120 MHz) uplink at Madrid

				• Increased supported convolutional data rate at near Earth Ka-band to 150 Mbps • Increased supported convolutional data rate at other frequencies except near Earth Ka-band to 10 Mbps • Added upcoming LDPC capability • Added upcoming SLE enhanced forward CLTU capability • Removed legacy telemetry bit stream service • Removed ATCA arraying capability • Revised information on recently-implemented capabilities • Added constraint on different VCID for different data delivery latency • Extended limit of received power for better LEOP support • Separated emergency support into two categories: limited continuity of operations and mission operation center hosting • Treated “Initial Acquisition” as a component of Engineering Support, rather than Data Services • Updated references on interfaces and design handbook • Updated description on service scheduling • Updated points of contact aligning to the current organization

Table of Contents

Section 1 Introduction 1-1
1.1 Purpose 1-1
1.2 Scope 1-1
1.3 Notation and Terminology 1-1

Section 2 DSN Overview 2-1
2.1 Mission Operations Context 2-1
2.1.1 Functional View 2-1
2.1.2 Physical View 2-2
2.2 Service Concepts 2-4
2.2.1 Data Services 2-4
2.2.2 Engineering Support 2-5
2.3 List of Services and Support 2-5
2.3.1 List of Standard Data Services 2-5
2.3.2 List of Engineering Support 2-6
2.3.3 List of Decommitted Capabilities 2-6

Section 3 Data Services 3-1
3.1 Command Services 3-1
3.1.1 Command Radiation Service 3-1
3.1.2 Command Delivery Service 3-4
3.2 Telemetry Services 3-7
3.2.1 Telemetry Services Metrics 3-7
3.2.2 Telemetry Frame Service 3-11
3.2.3 Telemetry Packet Service 3-14
3.2.4 Telemetry File Service 3-16
3.2.5 Beacon Tone Service 3-19
3.2.6 Relay Data Service 3-19
3.3 Tracking Services 3-19
3.3.1 Validated Radio Metric Data Service 3-21
3.3.2 Delta-DOR Service 3-23
3.4 Calibration and Modeling Services 3-24
3.4.1 Platform Calibration Service 3-24
3.4.2 Media Calibration Service 3-24
3.5 Radio Science Services 3-25
3.5.1 Experiment Access Service 3-26
3.5.2 Data Acquisition Service 3-26
3.6 Radio Astronomy/VLBI Services 3-27
3.6.1 Signal Capturing Service 3-27
3.6.2 VLBI Data Acquisition Service 3-27
3.6.3 VLBI Data Correlation Service 3-27
3.7 Radar Science Services 3-27
3.7.1 Experiment Access Service 3-28
3.7.2 Data Acquisition Service 3-28
3.8 Ground Communications Interface 3-29
3.9 Service Management 3-30

Section 4 Engineering Support 4-1
4.1 Systems Engineering Support 4-1
4.2 Advance Mission Planning Support 4-1
4.3 Emergency Mission Operations Center Hosting 4-1
4.4 Emergency Limited Continuity of Operations 4-1
4.5 RF Compatibility Test Support 4-1
4.6 Mission System Test Support 4-2
4.7 Spectrum and Frequency Management Support 4-2
4.8 Spacecraft Search / Emergency Support 4-2
4.9 Initial Acquisition 4-3

Section 5 DSN Stations – Operating Modes and Characteristics 5-1
5.1 Station Characteristics 5-1
5.2 Alternative Station Operating Modes 5-2
5.2.1 Multiple Spacecraft Per Antenna (MSPA) 5-3
5.2.2 Antenna Arraying 5-3
5.2.3 Interferometry Tracking 5-3
5.2.4 Site Diversity 5-3

Section 6 Obtaining Services and Support 6-1
6.1 General Policy 6-1
6.1.1 Access 6-1
6.1.2 Effective Duration of DSN Commitments 6-1
6.1.3 Use of Standard Services 6-1
6.1.4 Charges for Mission-unique Capabilities 6-1
6.2 Points of Contact 6-1
6.3 Pricing 6-1
6.3.1 Pricing for Standard Data Services 6-2
6.3.2 DSN Costing Calculations 6-3
6.3.3 Included Services 6-3
6.3.4 Multiple Spacecraft Per Antenna (MSPA) DSN Costing 6-4
6.3.5 Clustered Spacecraft Aggregated DSN Costing 6-5
6.3.6 Data Relay DSN Costing 6-6
6.3.7 Delta-DOR DSN Costing 6-6
6.3.8 Beacon Tone Monitoring DSN Costing 6-7
6.3.9 Compatibility Testing DSN Costing 6-7
6.4 Scheduling 6-7
6.5 Data Services Provisioning 6-8

List of Figures

Figure 2-1. Mission Operations Context – Functional View 2-1
Figure 2-2. Mission Operations Context – Physical View 2-2
Figure 2-3. DSN Asset Types and Locations 2-3
Figure 6-1. Aperture Fee Calculation 6-3
Figure 6-2. MSPA Aperture Fee 6-5
Figure 6-3. Data Service Interfaces 6-8

List of Tables

Table 3-1. Command Services Summary 3-1
Table 3-2. Attributes of the Command Radiation Service 3-2
Table 3-3. Attributes of the Command Delivery Service 3-6
Table 3-4. Example Frame Rejection Rates 3-8
Table 3-5. Attributes of Telemetry Frame Service 3-11
Table 3-6. Attributes of Telemetry Packet Service 3-14
Table 3-7. Attributes of Telemetry File Service 3-17
Table 3-8. Attributes of all Tracking Services 3-20
Table 3-9. Attributes of Radio Science Services 3-26
Table 5-1. DSN Station and RF Capabilities 5-2

Section 1
Introduction

1.1 Purpose

This Services Catalog provides a comprehensive overview of the capabilities available from the Deep Space Network to support flight projects and experiment investigations. The capabilities described here are focused on deep space missions, near-Earth missions above Geosynchronous Earth Orbit (GEO) distance, and ground-based observational science, although many are potentially applicable to other mission domains.

The descriptions given in this Services Catalog are intended to aid those preparing mission and experiment proposals, as well as those in the early stages of project planning. More specifically, the Services Catalog:

- Provides a standard taxonomy of services. It serves as the basis for service-level agreements and other instruments of commitment between flight project and experiment investigation customers and the service providers.
- Provides high-level descriptions of the capabilities. It will assist mission proposers and planners in scoping their efforts and in establishing conceptual designs for areas concerning space communications. In addition, since the DSN services and capabilities are constantly evolving, the Catalog is a means to communicate with missions for new things to come and old to decommission, so that the affected missions can plan for such changes in alignment with the DSN.
- Provides basic information regarding how to obtain services and support. It aids pre-project customers in planning. It includes information regarding pricing that can be used in deriving life-cycle cost estimates for mission systems. This is crucial in an era of full cost accounting, as the mission selection process conducted by the various National Aeronautics and Space Administration (NASA) Programs must take into account their expenditures on DSN services.

1.2 Scope

The capabilities identified in this Services Catalog come from the Deep Space Network (DSN), a multi-mission system, which provides space communication services, i.e., acquisition and/or transport of tracking, telemetry, and command (TT&C) data over the space links, as well as observational science utilizing those links.

The capabilities provided to customers are data services. These are operational functions that relate directly to the communications and tracking over space-ground communications links, and to the acquisition of observational data pertaining to such links. These functions are performed in their entirety by the service provider.

In accordance with established policy, this Services Catalog includes only capabilities that are either available or have funded deployment plans and approved commitment dates at the time of its release.

Note that the Services Catalog is not a requirements, design, or interface specification. The various documents more fully defining the capabilities and their interfaces are discussed in Section 2, "DSN Overview", and identified in Section 3, "Data Services". The various instruments of commitment and their usage are discussed in Section 6.4, "Commitment Process".

1.3 Notation and Terminology

Throughout this Services Catalog, references to external documents are noted by footnotes. A complete list of references is shown in Appendix B, "Document Information".

Terms and acronyms used within this Services Catalog are defined in Appendix A, "Glossary & Acronyms". However, the reader should be particularly aware of some key terms. They are:

Capability……	Used generically in the Services Catalog to refer to any and all services and support used by missions
Customer…….	An organization that requires capabilities from the DSN in order to conduct a flight project or experiment investigation
Decommissioned…….	Applies to a capability or facility that is no longer supported for use by any customer
DSN Science……	Refers collectively to Radio Science services, Radio Astronomy / Very Long Baseline Interferometry (VLBI) services, and Radar Science services, or the data and meta-data generated by these services
Mission…….	Used generically in the Services Catalog to refer to a flight project, and an experiment investigation conducted in conjunction with a flight project, or an experiment investigation using the DSN as a science instrument
Mission Data .....…	Data that are transported via the space-ground communications link, or are derived from observation of that link – including command data (but not all information pertaining to command preparation), telemetry (level 0 or thereabouts), tracking data (but not navigation data), and DSN science data
User .....…	A person participating in flight project mission operations or an experiment investigation, who interacts directly with services or support provided by the DSN

Section 2
DSN Overview

This section provides a description of the DSN in the context of mission operations, a physical view of the DSN, and the service concept of the DSN.

2.1 Mission Operations Context

2.1.1 Functional View

Figure 2.1 depicts a functional view of the DSN in the context of mission operations. The breakdown shown is typical for a flight project, although there can be substantial variation due to particular mission's characteristics, organization, and operational strategy.

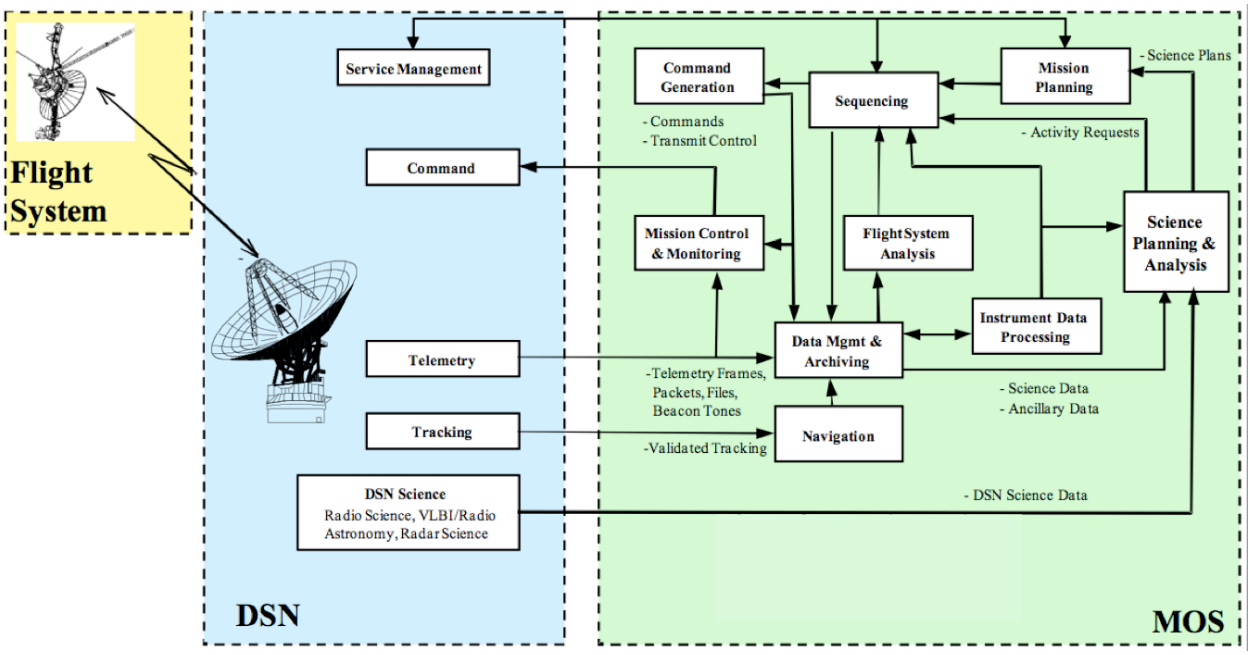

Figure 2-1. Mission Operations Context – Functional View

Three distinct operational domains are shown in the diagram above:

- Flight system – The flight system performs as a semi-autonomous operations system. It carries out a wide variety of functions (such as command or sequence execution, making in situ or remote measurements, on-board data management, and the on-board aspects of space communication, etc.) that vary by mission. The flight system communicates directly with the DSN via the space-ground communications link, and indirectly with the flight project's Mission Operations System (MOS) through the DSN.
- DSN – The DSN operates on a multi-mission basis, serving many flight projects and experiments concurrently. The DSN carries out a standard set of functions on the customer's behalf (e.g., command and telemetry data transport, tracking, and ground-based science data acquisition). These are coordinated via a common service management function. The DSN communicates with the

flight system directly via the space-ground communications link, and with the MOS via a set of standard service interfaces.

- Mission Operations System (MOS) – The flight project's or experiment investigation's MOS operates largely as a dedicated operations system. The MOS carries out the ground engineering functions necessary to operate a mission (such as planning, sequence and command generation, navigation, and analysis of flight system performance and behavior). Science planning and analysis may also be carried out by the MOS (as shown), or may be relegated to a separate Science Operations System which interacts closely with the MOS. The MOS communicates directly with the DSN via the service interfaces, and indirectly with the flight system through the DSN.

2.1.2 Physical View

Figure 2.2 depicts a physical view of the DSN in the context of mission operations, identifying the key facilities used in supporting flight projects and experiment investigations.

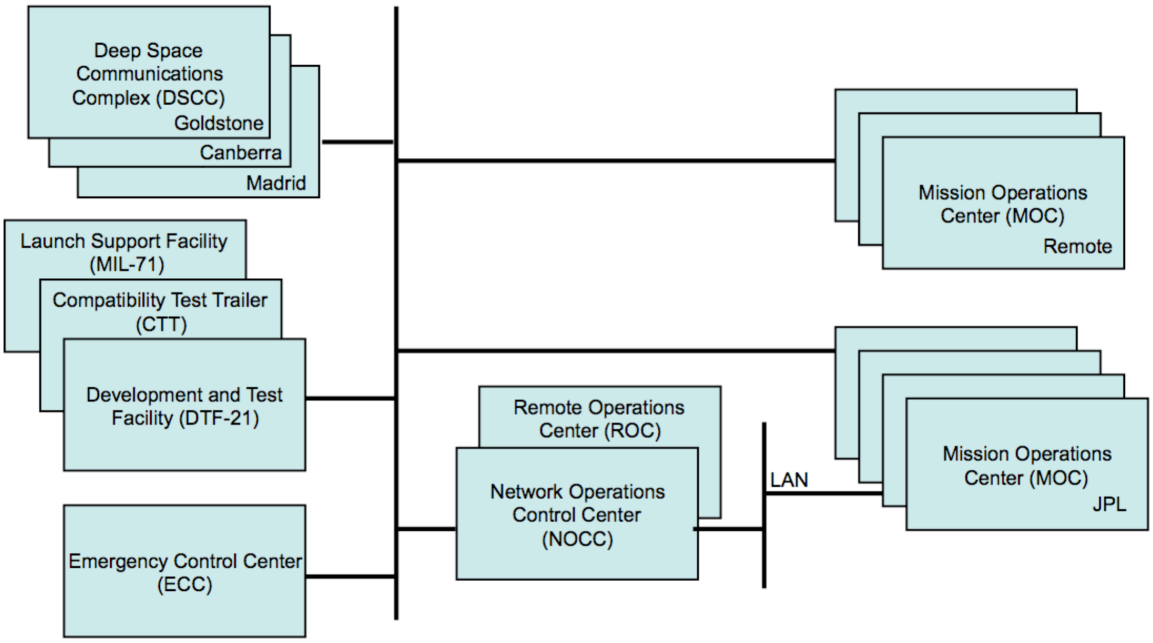

Figure 2-2. Mission Operations Context – Physical View

The facilities shown in the figure are described as follows:

- Deep Space Communications Complexes (DSCC) – The three DSCC facilities are located near Barstow in Goldstone, California; Madrid in Spain; and Canberra in Australia. Each complex has a Signal Processing Center (SPC) and a number of antennas, including a 70m antenna, a 34m High Efficiency (HEF) antenna, and multiple 34m Beam Wave Guide (BWG) antennas. It also has the support infrastructure and personnel needed to operate and maintain the antennas.

  Figure 2.3 identifies the antenna sizes and types available at each of the locations. These stations communicate with and track spacecraft at S-, X- or Ka-band. See section 5.1, "DSN Stations – Operating Modes and Characteristics" for a summary of the characteristics and RF capabilities of

each antenna. A more detailed specification of the key characteristics of the DSN antennas can be found in the DSN Telecommunications Link Design Handbook[1]

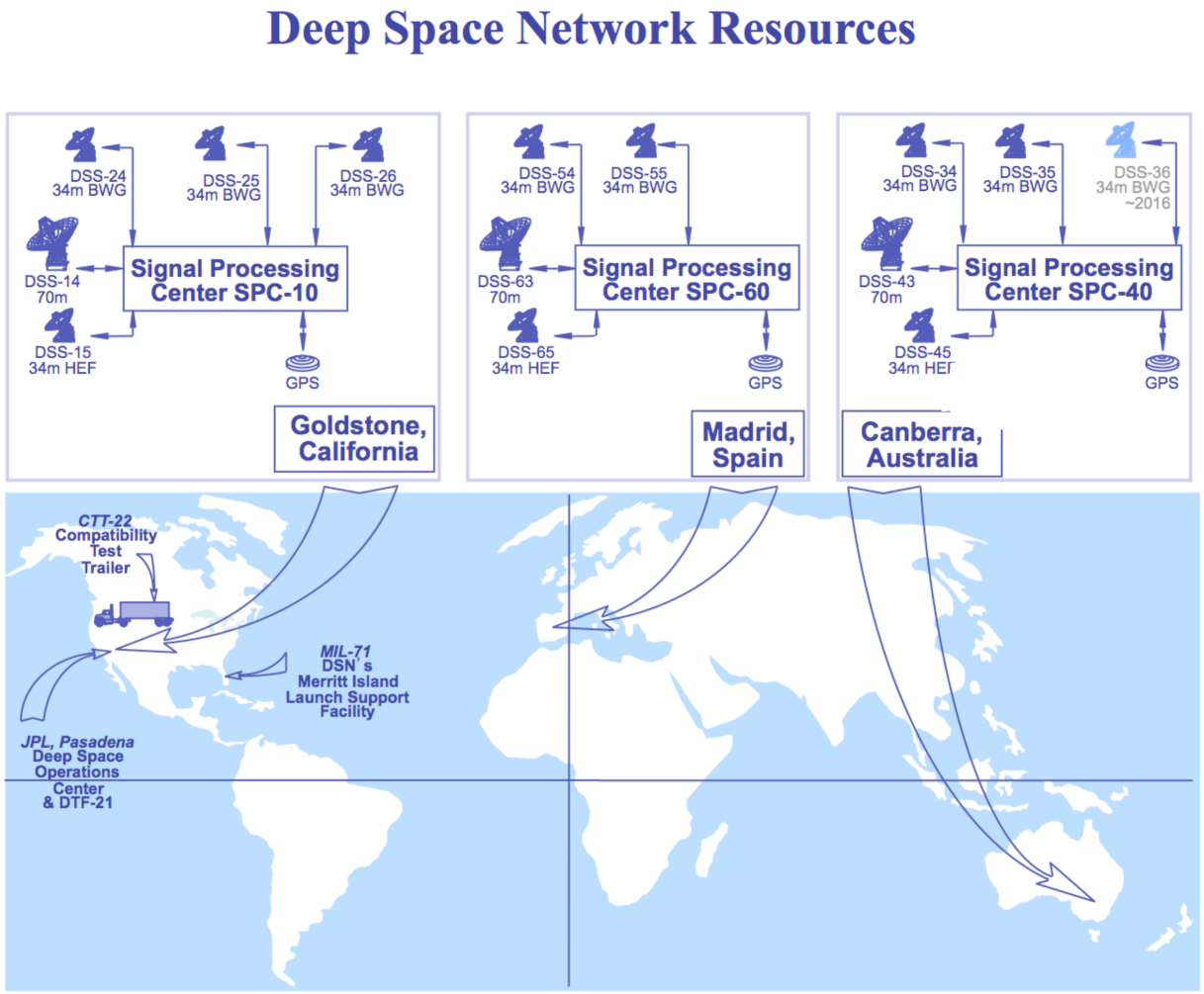

Figure 2-3. DSN Asset Types and Locations

[1] DSN Telecommunications Link Design Handbook, Document No. 810-005, Rev. E, Jet Propulsion Laboratory, Pasadena, California

- DSN Test Facilities
  - The Development and Test Facility (DTF-21), located near JPL, is used to conduct tests of RF compatibility between the DSN and the customer's flight system, and as a developmental test facility for modifications to be implemented in the DSN.
  - The Compatibility Test Trailer (CTT-22) is a transportable facility for conducting tests of RF compatibility between the DSN and the customer's flight system at the customer's facility.
  - The Launch Support Facility (MIL-71) provides DSN-compatible launch support for launch operations at NASA's Kennedy Space Center.
- Emergency Control Center (ECC) – This DSN facility is located at Goldstone, California. It is a scaled-down mission operations center intended to enable limited DSN continuity of operations and flight operations in the event that a natural disaster or other catastrophe disables operations at JPL.
- Deep Space Operations Center (DSOC) – This is a facility located at the JPL Oak Grove site in Pasadena, California. The DSOC includes the computing and communications equipment and the personnel that provide central monitor and control of the network, coordination between the globally distributed DSCCs, as well as data processing and data delivery interface to the missions.
- Remote Operations Center (ROC) – This center comprises the facilities, equipment, and personnel that provide day-to-day operations engineering and support functions for the DSN.
- Mission Operation Centers (MOCs) – These customer facilities house the MOS. They are typically assigned to a single flight project, although shared MOCs are sometimes used. Depending on the project, MOCs may be located at JPL in Pasadena, California, at the customer's home institution, at a spacecraft vendor's site or some combination thereof.

  An alternative term that is commonly used in reference to JPL missions is Mission Support Area (MSA). This can be thought of as a synonym for "MOC", or as a reference to a dedicated area with a larger MOC serving multiple missions.

2.2 Service Concepts

The DSN provides a variety of capabilities that support a broad range of mission functions. The capabilities provided by the DSN are classified as follows:

- Data Services
- Engineering Support

2.2.1 Data Services

Generally, "service" means "work done on behalf of another". Within this Services Catalog, we use a more stringent definition that conforms to the precepts of service-oriented systems architectures:

Service – A self-contained function, which accepts one or more requests and returns one or more responses through a well-defined, standard interface. A service does not depend on the context or state of other services or processes (although it may utilize other services via their interfaces).

Services are specified from the user's point of view, i.e., in terms of "what it provides" rather than "how it is performed" or "what does the job". In other words, a service is completely specified in terms of its behavior and performance without reference to a particular implementation.

The services described herein are "mission operations" services, i.e., a service provider (e.g., the DSN) produces engineering or science operations results for a flight project or experiment investigation. The

service is the "whole job" in the operations sense. It will thus typically involve a combination of software components, computing and communications hardware, personnel and the procedures they follow, as well as facilities. Further, the service is also the "whole job" in the life-cycle sense. The design, implementation, integration, verification and validation activities needed to supply the service are an inherent part of it.

"Data Services" are mission operations services that relate directly to the transport of mission data over space-ground communications links, and to the acquisition of observational data pertaining to such links. They exhibit the following common characteristics:

- "Pick & Choose" – The data services offered by the DSN are independent of each other, i.e., subscribing to one service does not imply a need to also subscribe to additional, unrelated services. Customers can thus pick and choose those services that are relevant to their purposes and cost-effective to use.
- "Plug & Play" – DSN-provided data services are multi-mission in nature. This means that they generally require table adaptations, provided they are used in accordance with their standard definition. No development is required on the part of the DSN beyond configuration, parameter updates, mission service validations and interface testing. The development needed on the customer's side is limited to that inherent in using the standard service and meeting its interfaces
- Standard Interfaces – DSN-provided data services are accessed via well-defined, standard data and control interfaces. "Standard interfaces" in this usage include those formally established by standards organizations (e.g., the Consultative Committee for Space Data Systems (CCSDS), the Space Frequency Coordination Group (SFCG), the International Telecommunication Union (ITU), the International Organization for Standardization (ISO)), de facto standards widely applied within industry, and common interfaces specified by the DSN. Where feasible, data service interface standards have been chosen so as to enable a high degree of interoperability with similar services from other providers. This mitigates the need for additional development effort on the part of both the DSN and the customer, as well as maximizing the customer's opportunities to reuse service utilization applications
- Accountable – The performance of each data service to which a customer subscribes is routinely measured and reported. In addition, since services are provided on a fee schedule basis, the recurring costs of providing a particular service are also tracked.

2.2.2 Engineering Support

DSN engineering personnel can be made available to support customers in conducting pre-project studies, mission design, MOS/GDS development, integration and test, as well as mission operations. These are most commonly conducted on a level-of-effort basis, but may entail specific deliverables. The scope of each engineering support activity must be assessed on a case-by-case basis, and availability of personnel is naturally limited.

2.3 List of Services and Support

The following sections list the services and support capabilities offered by the DSN.

2.3.1 List of Standard Data Services

- **Command Services**
  - Command Radiation Service

  - Command Delivery Service
- **Telemetry Services**
  - Telemetry Frame Service
  - Telemetry Packet Service
  - Telemetry File Service
  - Beacon Tone Service
  - Relay Service
- **Tracking Services**
  - Validated Radio Metric Data Service
  - Delta-DOR Service
- **Calibration and Modeling Services**
  - Platform Calibration Service
  - Media Calibration Service
- **Radio Science Services**
  - Experiment Access Service
  - Data Acquisition Service
- **Radio Astronomy / VLBI Services**
  - Signal Capturing Service
  - VLBI Data Acquisition Service
  - VLBI Data Correlation Service
- **Radar Science Services**
  - Experiment Access Service
  - Data Acquisition Service

2.3.2 List of Engineering Support

- System Engineering Support
- Advanced Mission Planning Support
- Emergency Mission Operations Center Support
- Emergency Limited Continuity of Operations
- RF Compatibility Test Support
- Mission System Test Support
- Spectrum and Frequency Management Support
- Spacecraft Search Support
- Initial Acquisition

2.3.3 List of Decommitted Capabilities

The following capabilities are decommitted and are not available to new missions (applicable service identified in the "(…)"); they still may be available to missions with an existing commitment. The information is therefore not reflected in later Services Attributes Tables in Section 3.

- Square wave subcarrier for command modulation (Command Radiation and Command Delivery Services)
- 400 kW S-band uplink (Command Radiation and Command Delivery Services)
- Long constraint length (k=15, r=1/4 or 1/6) convolutional codes (Frame, Packet, File, and Relay Services)
- 30 day data retention (Frame, Packet, File, and Relay Services)
- Tracking data interface TRK-2-18 (Validated Radio Metric Data and Delta-DOR Services)

Section 3
Data Services

This section describes the standard data services provided by DSN. The individual data services are grouped into eight service families. Each family is a collection of functionally related services. The various services within a family are distinguished from one another by the level of processing involved, their value-added function, or the type(s) of source data.

Performance values specified in this document are for conception only. Please see reference documents for latest performance specifications.

3.1 Command Services

The Command Services transmit data to the spacecraft. Command data transmitted typically includes commands, sequence loads, and flight software loads, but may also include any other types of data elements. This service family is functionally divided into Command Radiation service and Command Delivery service. The following summarizes these services in terms of their associated data modes and protocols:

Table 3-1. Command Services Summary

Command Service Type	Data Mode	Protocol and Interface Specification
Command Radiation Service	Stream Mode	CCSDS SLE Forward CLTU Service[2] 0163-Telecomm[3]
	File Mode	AMMOS Space Command Message File (SCMF) Interface, 0198-Telecomm[4]
Command Delivery Service	File Mode	CCSDS File Delivery Protocol (CFDP), 0213-Telecomm[5]

3.1.1 Command Radiation Service

Command Radiation is the more rudimentary of the two services. DSN operates this service in either a Stream Mode or a File Mode. In the stream mode, data in the form of Command Link Transmission Units (CLTUs) is received from a customer's MOS and radiated, as prescribed in the SLE Data PDU, to a spacecraft during a pass as a series of individual data units (that could be concatenated). Conversely, in file mode, a command file, i.e., the Space Command Message File (SCMF) is stored at DSN DSOC prior to, or during, a pass and radiated to the spacecraft at a customer-specified time (radiation is reliant on an

[2] Space Link Extension Forward CLTU Service Specification, CCSDS 912.1-B-2, Blue Book, November 2004

[3] Deep Space Network / Detailed Interface Design, Document No. 820-013, 0163-Telecomm, " Space Link Extension Forward Link Service and Return Link Service"

[4] Deep Space Network / Detailed Interface Design, Document No. 820-013, 0198-Telecomm-SCMF, "Spacecraft Command Message File (SCMF) Interface"

[5] Deep Space Network / Detailed Interface Design, Document No. 820-013, 0213-Telecomm-CFDP, "Deep Space Network (DSN) Interface for the CCDSDS File Delivery Protocol (CFDP)"

operator). Both modes ensure timely radiation of command data; however, error-free command delivery to the spacecraft is not guaranteed.

The CCSDS Space Link Extension (SLE) CLTU is the standard interface protocol in stream mode, with the DSN Command Radiation.

Table 3.2 contains a set of attributes summarizing the functions, performance, and interfaces for the Command Radiation Service. Relevant documents for this service are also identified in the table.

Table 3-2. Attributes of the Command Radiation Service

Parameter	Value
Frequency Bands Supported	Near-Earth S, X Deep space S[6], X
EIRP and Transmitting Power	S-Band: 34m BWG 99 dBW at 20 kW 34m HEF 79 dBW at 250 W 70m 106 dBW at 20 kW X-band: 34m BWG/HEF 110 dBW at 20 kW 70m 116 dBW at 20 kW Refer to Table 5-1
Polarizations Supported	RCP LCP No RCP/LCP simultaneity
Modulation Types	BPSK on subcarrier for uplink rate ≤ 4 kbps BPSK directly on carrier for uplink rate 4 kbps to 256 kbps[7]
Modulation Formats	NRZ: L, M, S Bi-phase L or Manchester, M, S
Modulation Index Range	Sinewave subcarrier: 0.1 – 1.52 radians Squarewave subcarrier: 0.1 – 1.40 radians No subcarrier: 0.1 – 1.57 radians
Carrier/Subcarrier Waveform	Residual carrier: sine wave Subcarrier: 8 or 16 kHz
Uplink Acquisition Types	CCSDS Physical Link Operations Procedure-2 (PLOP-2)
Uplink Data Rate	Maximum 256 kbps Minimum 7.8 bps
Channel Coding	Provided by mission user

[6] S-band uplink at Madrid excludes the use of 2110-2120 MHz frequency band, per agreement between NASA and Secretaria de Estado de Telecomunicaciones para la Sociedad de la Informacion (SETSI), January 2001.

[7] It is recommended to use large CLTU size (32 kb) for high command data rate (e.g., 256 kbps) to minimize the transaction rate.

Parameter	Value
Data from MOC to DSN	Stream of CLTUs over a TCP/IP interface or File of CLTUs
Data from DSN To Spacecraft	CLTU per CCSDS TC Space Link Protocol (ref. CCSDS 232.0-B-1)
Data Unit Size	Maximum CLTU size: 32,752 bits Minimum: 16 bits A series of CLTUs can be contiguously radiated.
Data Retention Period	No data retention other than buffer staging for radiation
Data Delivery Methods from MOC to DSN	CCSDS Space Link Extension (SLE) Forward CLTU (ref. CCSDS 912.1-B-2), on-line delivery mode CCSDS SLE Enhanced Forward CLTU (ref. CCSDS 912.11-O-1), on-line delivery mode (being implemented, available in 2017) AMMOS Space Command Message File (SCMF) Interface, on-line or off-line delivery mode
Radiation Latency	≤ 125 milliseconds per CLTU
Service Operating Mode	Automated
Service Availability	Nominal 95% Mission critical event 98%
Data Quality†	Bit error rate: 10^{-7} CLTU error rate: 10^{-4}
Accountability Reporting	SLE command radiation status report
Ground Communication Interface Methods	Refer to Section 3.8
DSN Interface Specifications	DSN documents 810-005; 810-007[8]; 820-013 0163-Telecomm, 0191-Telecomm, 0197-Telecomm, 0198-Telecomm

† Error rates depend on received SNR at the spacecraft

The Command Radiation Service offers two ranges of uplink data rates using different command modulation schemes – Low-Rate command and Medium-Rate command

1) Low-Rate Command – Uplink rates for Low-Rate Command range from 7.8 bps to 4 kbps. The uplink modulation scheme for this mode complies with the CCSDS recommendation[9]. Command

[8] DSN Mission Interface Design Handbook, Document No. 810-007, Rev. E, Jet Propulsion Laboratory, Pasadena, California.

data units from the customer's MOS are Phase Shift Key (PSK) modulated by the DSN on a 8 or 16 kHz sine wave subcarrier such that the subcarrier is fully suppressed. This PSK-modulated subcarrier is then modulated onto the RF carrier so as to leave a residual (remaining) carrier component.

2) Medium-Rate Command – Uplink rates for Medium-Rate Command range from 8 kbps to 256 kbps. The uplink modulation scheme for this mode complies with the CCSDS recommendation[10]. Command data units from the customer's MOS are modulated onto an RF carrier (instead of subcarrier) by the DSN so as to leave a residual (remaining) carrier component. The maximum uplink data rate, 256 kbps as shown in Tables 3.2 and 3.3, can only be met under limited circumstances:
   a) Contiguous radiation of a sequence of CLTUs is ensured
   b) The radiation duration of each CLTU (number of bits/data rate) must be greater than 100 msec
   c) The maximum CLTU size that can be accepted is 32,752 bits

Moreover, data quality identified in Tables 3.2 and 3.3 assumes sufficient E_b/N_0 provided for the space forward link.

3.1.2 Command Delivery Service

Command Delivery is a more comprehensive service. This service includes the functionality of lower level services, i.e., the Command Radiation Service, and the reliable command delivery feature. It accepts command files from a Project's MOS in either real-time or at any point prior to the time designated for radiation. The command files are stored at the DSOC until positive confirmation of successful file delivery to the spacecraft. Using the standard CCSDS File Delivery Protocol (CFDP)[11], this service executes command radiation while providing reliable "error-free" delivery of command data to a spacecraft. The reliable command delivery is accomplished through the selective retransmission scheme of CFDP. Therefore, missions subscribing to this service must implement that capability on the spacecraft compliant to the CFDP standard. This service requires the project to send the CFDP response directives (ACK, NAK and FIN) that are received from the S/C via telemetry to the DSN. The Command Delivery service can operate in either of two basic modes:

- Unacknowledged mode – In this mode, missing PDUs or other uncorrected errors in transmission are not reported by the spacecraft. This mode thus does not require interactive response from the spacecraft. However, missed data will not be automatically retransmitted. This is referred to in the CCSDS specification as "unreliable transfer".

- Acknowledged mode – This mode guarantees complete file transfer within the parameters established for the protocol. The spacecraft will automatically notify the DSN (via downlink telemetry) if file segments or ancillary data are not successfully received (i.e., PDUs are missing or malformed). The DSN can then retransmit the missed items, and the spacecraft will combine them with the portions that were previously received. This is referred to in the CCSDS specification as "reliable transfer".

---

[9] CCSDS Recommendation, "Low-Rate Telecommand Systems" in Radio Frequency and Modulation System, Part 1 - Earth Stations and Spacecraft, CCSDS 401.0-B-18, Blue Book, December 2007

[10] CCSDS Recommendation, "Medium-Rate Telecommand Systems" in Radio Frequency and Modulation System, Part 1 - Earth Stations and Spacecraft, CCSDS 401.0-B-18, Blue Book, December 2007

[11] CCSDS File Delivery Protocol (CFDP), CCSDS 727.0-B-4, Blue Book, January 2007

Table 3.3 contains a set of attributes summarizing the functions, performance, and interfaces for the Command Delivery Service. Relevant documents to this service are also identified in the table.

Table 3-3. Attributes of the Command Delivery Service

Parameter	Value
Frequency Bands Supported	Near-Earth S, X Deep space S[12], X
EIRP and Transmitting Power	S-Band: 34m BWG 99 dBW at 20 kW 34m HEF 79 dBW at 250 W 70m 106 dBW at 20 kW X-band: 34m BWG/HEF 110 dBW at 20 kW 70m 116 dBW at 20 kW Refer to Table 5-1
Polarizations Supported	RCP LCP No RCP/LCP simultaneity
Modulation Types	BPSK on subcarrier for uplink rate ≤ 4 kbps PSK directly on carrier for uplink rate 4 kbps to 256 kbps[13]
Modulation Formats	NRZ: L, M, S Bi-phase L or Manchester, M, S
Modulation Index Range	Sinewave subcarrier: 0.1 – 1.52 radians Squarewave subcarrier: 0.1 – 1.40 radians No subcarrier: 0.1 – 1.57 radians
Carrier/Subcarrier Waveform	Residual carrier: sine wave Subcarrier: 8 or 16 kHz
Uplink Acquisition Types	CCSDS Physical Link Operations Procedure-2 (PLOP-2)
Uplink Data Rate	Maximum 256 kbps Minimum 7.8 bps
Channel Coding	Provided by mission user
Service Modes	Non-acknowledged Acknowledged
Data from MOC to DSN	Files per CCSDS File Delivery Protocol (CFDP) standard (ref. CCSDS 727.0-B-4)
Data from DSN To Spacecraft	Files per CCSDS File Delivery Protocol (CFDP) standard (ref. CCSDS 727.0-B-4)

[12] S-band uplink at Madrid excludes the use of 2110-2120 MHz frequency band, per agreement between NASA and Secretaria de Estado de Telecomunicaciones para la Sociedad de la Informacion (SETSI), January 2001.

[13] It is recommended to use large CLTU size (32 kb) for high command data rate (e.g., 256 kbps) to minimize the transaction rate.

Parameter	Value
Data Unit Size	Maximum PDU size: 32,752 bits Minimum: 16 bits
Data Retention Period	Data retention from the time of receiving the file to successful transmission
Data Delivery Methods from MOC to DSN	File transfer on-line during the pass or off-line before the pass
Service Availability	Nominal 95% Mission critical event 98%
Data Completeness	100% for acknowledged service mode (guaranteed delivery)
Data Quality†	CLTU error rate: 10^{-4} (with BCH encoding) Undetected error rate: about $5x10^{-8}$
Accountability Reporting	Radiation log, event report, and CFDP transaction log
Ground Communication Interface Methods	Refer to Section 3.8
DSN Interface Specifications	DSN documents 810-005; 810-007; 820-013 0188-Telecomm, 0197-Telecomm, 0213-Telecomm-CFDP

† Error rates depend on received SNR at the spacecraft

3.2 Telemetry Services

Telemetry Services acquire telemetry data from a CCSDS compliant space link, extract communications protocol data structures, and deliver them to a customer's MOS. Three different levels of services are available. Subscription to a particular level automatically includes the lower level services. The services available are:

- Frame
- Packet
- File

Accountability for performance is an essential aspect of the service paradigm. Since telemetry services primarily involve data acquisition and delivery, accountability requires measures of the quantity, continuity, and latency of the data delivered.

3.2.1 Telemetry Services Metrics

There are several attributes of telemetry services metrics.

3.2.1.1 Quantity

Quantity is defined as the volume of "acceptable" data units delivered by the service. For telemetry, *data units* are Frames, Packets, and Files. Quantity is measured as the percentage of the total data return expected from the execution of the service instances, over a period of one month, as committed in the schedule. The DSN routinely achieves 95% delivery during the life of mission; however, up to 98% is

achievable provided there is sufficient justification and special arrangements are made, e.g., for supporting mission critical events. These values are derived from an assessed probability of unrecoverable data loss based upon service availability statistics from the DSN. It must also be noted that use of acknowledged Telemetry File service will significantly improve the percentage of original data delivered, which is reflected in the Data Completeness attribute in Table 3-7. Attributes of Telemetry File Service.

The *quantity* metrics defined above do not take into account the following causes of data loss:

- Insufficient data margin for the space link
- Adverse weather conditions
- Solar Conjunction
- Loss of data due to certain spacecraft events or anomalies, (e.g., occultation, spacecraft off-pointing during downlink, tracking mode change, and sequence errors)

Users of any frequency band will experience some outages due to adverse weather conditions. The extent of outages depends strongly on the user's assumptions about weather when configuring their spacecraft, and the application of data management techniques such as CFDP. Users are advised to design their data return strategy to be tolerant of weather caused data delays or gaps. The peak data quantity at S-, X-, and Ka-band is currently believed to result from assuming approximately 98th, 95th, and 90th percentile weather respectively when using long-term statistical averages. Thus the user should design the data return strategy such that planned re-transmission of 2%, 5%, or 10% is acceptable. However, since the role of climatic fluctuation is not yet fully understood at Ka-band, some consideration should be given to the possibility that weather will be significantly better or worse than the historical averages. For optimal link utilization at Ka-band, users should plan on near real-time data rate adjustments based on weather conditions.

3.2.1.2 Quality

Quality is defined as the "error rate" for the delivered data units over the end-to-end path.

A major contributing factor to telemetry *quality* is the *frame rejection rate*. A frame is “rejected” when it fails to decode or fails a checksum process. Telemetry *data units* typically use error-detecting and/or error-correcting codes such as Reed Solomon, convolutional, turbo, or some combination of these. Table 3.4 gives some sample *frame rejection rates* for variation of block size, coding scheme, and link margin. As the table illustrates, customers must determine the acceptable frame rejection rate for their circumstances, select a coding scheme accordingly, and maintain an adequate link margin in order to ensure the required performance.

Table 3-4. Example Frame Rejection Rates

Frame Rejection Rate	Block Size (frame or packet)	Coding and Link Margin
$< 10^{-6}$	8920 bits	Convolutional (r=1/2, k=7), code concatenated with Reed-Solomon (223/255) block code; @ $E_b/N_0 \geq 1.8$dB
$< 10^{-4}$	8920 bits	Rate = 1/3 turbo code; @ $E_b/N_0 \geq 0.4$dB
$< 10^{-5}$	1784 bits	Rate = 1/6 turbo code; @ $E_b/N_0 \geq 0.4$dB
$< 10^{-6}$	1024 bits	Rate = 1/2 low density parity code; @ $E_b/N_0 \geq 2.4$ dB

Another contributing factor to telemetry quality, the undetected error rate introduced by ground equipment, is less than 4×10^{-12}, and can therefore typically be ignored.

Data quality identified in Tables 3.5 - 3.7 assumes sufficient E_b/N_0 floor provided for the space return link. The conditions required to meet the telemetry data continuity as described in section 3.2.1.3 are also applicable to the telemetry data quality.

3.2.1.3 Continuity

Continuity is defined as the number of gaps in the set of data units delivered to a customer during a scheduled pass. A gap is defined as the loss of one or more consecutive data units. Continuity is distinguished from quality in that the former counts the number of gaps (holes) in the data set during a scheduled pass, while the latter measures the percentage of the total number of data units returned to a customer during the same scheduled pass.

Data units are Frames or Packets depending upon the subscribed service type. The DSN routinely provides a gap rate less than or equal to 8 gaps per pass provided:

- The E_b/N_0 is sufficient for a Frame Rejection Rate $\leq 1 \times 10^{-5}$ at all times during the pass.
- There are no spacecraft anomalies throughout the pass.
- There are no change in the telemetry data rate or link configuration (1-way, 2-way, 3-way) during the pass that would necessitate a reacquisition.
- No RFI events occur during the pass.

Users are advised to design their mission data return strategy to be tolerant of this nominal condition.

3.2.1.4 Latency

The definition of *Latency* for telemetry is the delay between a data unit's reception at a specified point and its delivery to another point where it becomes accessible to a customer. For *Telemetry Frame Service, Telemetry Packet Service*, and *Telemetry File Service,* the point of reception is the antenna (or antennas) when the corresponding frame(s) of the data unit (frame, packet, or file) are acquired and the point of delivery is the customer's MOS.

However, the latency is a function of the bandwidth between the DSN and the customer’s MOS, which is not under the control of the DSN. In the discussions below, it is assumed that this bandwidth is sufficiently large to ensure that it is not a constraint in the data delivery latency.

The latency is normally measured based on frames that are decoded at the station. The nominal performance excludes major equipment or network outages in the DSN.

Three grades of Quality of Service (QoS) are defined for telemetry, each corresponding to a specific delivery mode. The DSN determines the type of data delivery based on the virtual channel ID (VCID); thus, it is important for missions to use distinct VCID for various data streams with different required latency.

Grade of Delivery Service	*Delivery Mode & Method*	*Delivery Latency*	*Delivery Completeness*
Grade 1 - Online Timely Data delivery is initiated immediately upon ingestion, and the data delivery rate is equal to the data ingest rate throughout the duration of the service instance. If the service cannot keep up for any reason, data units will be skipped, i.e., the most recent data will always be delivered within the time constraint. Skipped data units may be delivered subsequently via Grade 3-Offline complete mode. Delivery is limited to 100 kbps per mission service instance. Usage: Transport of data for which low latency is more important than completeness, e.g., S/C housekeeping data, space link accountability data.	Online Stream	~10 seconds (plus 4 telemetry frames)	~ 95%
Grade 2 - Online Complete Data delivery is initiated immediately upon ingestion, but the data delivery rate may be less than the data ingest rate due to outbound bandwidth constraints, resulting in delayed delivery of data units. A high degree of data completeness is guaranteed. Delivery is limited to 1 Mbps per mission service instance. Usage: Transport of data for requiring intermediate latency and high completeness, e.g., engineering or science data used for quick turnaround planning. It is meant for short-duration download.	Online Stream or File	~ minutes (for telemetry data, subject to mission data rate and latency requirement)	~ 99.99%
Grade 3 - Offline Complete Data delivery may be initiated at any time after ingestion starts, including after ingestion is complete. Further, the data delivery rate may be less than the data ingest rate due to outbound bandwidth constraints. A high degree of data completeness is guaranteed. Usage: Transport of high-volume data that requires a high degree of completeness but for which greater latency can be tolerated, e.g., image or other science data.	Offline Stream or File	12-24 hours	~ 99.99%

The latencies for the above QoS are also a function of the aggregate data acquisition (capture) rates at the DSN site, i.e., the DSCC. They will vary from time to time.

3.2.1.5 Telemetry Data Acquisition Throughput

Depending on the link performance, coding scheme, modulation method, and other factors, the maximum telemetry acquisition or capture rate supported by the DSN is:

- 10 Mbps (deep space) and 150 Mbps (for near Earth Ka-band) for convolutional encoded data (r=1/2, k=7) concatenated with Reed-Solomon encoding;
- 1.6 Mbps for Turbo encoded data (1 Mbps for 1/6 codes);

- The minimum supported data rate is 10 bps (uncoded), but it is recommended that the data rate be at least 40 bps for a timely acquisition.

However, since multiple missions are simultaneously tracked by each DSCC, the achievable telemetry data acquisition throughput for a given mission is constrained by the maximum aggregate data capture rate of 180 Mbps at the DSCC. A consequence, for example, is that the number of missions simultaneously downlinking at higher data rate over the same DSCC is limited.

3.2.2 Telemetry Frame Service

Telemetry Frame Service is available to missions meeting the following criteria:

- A frame structure compliant with the CCSDS Packet Telemetry[14] recommendation or CCSDS Advanced Orbiting Systems (AOS)[15]
- A fixed length frame, where each frame is preceded by a CCSDS compliant synchronization marker.
- The frame bits are pseudo-randomized according to the CCSDS Recommendation for Telemetry Channel Coding (required for turbo coding; recommended for all other codes). In DSN processing, the de-randomization takes place after symbol demodulation and frame synchronization.
- Each frame either contains a CRC checksum or uses a block code that will reject undecodable frames (e.g., Reed-Solomon)

The following output options are available for frame service:

- All Frame service[16], which provides both actual data frames and filler frames;
- Virtual Channel service[17], which provides data frames, i.e., virtual channel data units (VCDUs), within each virtual channel. All data frames within a virtual channel are delivered in order of their acquisition time.

Table 3.5 contains a set of attributes summarizing the functions, performance, and interfaces for the Telemetry Frame Service. Relevant documents to this service are also identified in the table.

Table 3-5. Attributes of Telemetry Frame Service

Parameter	Value
Frequency Bands Supported	Near-Earth S, X, Ka[18] Deep space S, X, Ka

[14] Packet Telemetry Services, CCSDS 103.0-B-1, Blue Book, May 1996
[15] AOS Space Link Protocol, CCSDS 732.0-B-2, Blue Book, July 2006
[16] Space Link Extension Return All Frames Service, CCSDS 911.1-B-2, Blue Book, November 2004
[17] Space Link Extension Return Channel Frame Service, CCSDS 911.2-B-2, Blue Book, January 2010
[18] Near-Earth Ka-band can be concurrently received with S-band, but not X-band

Parameter	Value
G/T @ 45 Degree Elevation, diplexed (refer to Table 5.1)	S-Band G/T (dB) 34m BWG 40.8 34m HEF 39.4 70m 49.8 X-Band G/T (dB) 34m BWG 54.2 34m HEF 53.2 70m 61.5 Ka-Band G/T (dB) 34m BWG (deep space, 32 GHz) 61.1 34m BWG (near Earth, 26 GHz) 58.2
Polarizations Supported	RCP LCP RCP/LCP simultaneity at some stations for S-, X-and deep space Ka-band.
Modulation Types	PSK on residual carrier (with or without subcarrier) BPSK on suppressed carrier (no ranging) QPSK, OQPSK* (no ranging)
Modulation Formats	NRZ: L, M, S; Bi-phase L or Manchester, M, S
Carrier/Subcarrier Waveform	Residual carrier: sine or square wave
Downlink Data Rate (Information and redundancy)	Maximum: 150 Mbps for near Earth Ka-band 10 Mbps for other frequencies Minimum: 10 bps (> 40 bps recommended for timely acquisition)
Downlink Symbol Rate	Maximum: 300 Msps for near Earth Ka-band (with ½ code) 20 Msps for other frequencies (with ½ code) Minimum: 20 sps (with ½ code)
Forward Error Correction	Convolutional codes: (k=7, r=1/2), without punctured code option Reed-Solomon (RS) interleave = 1 to 8 Reed-Solomon (RS) without convolutional code Reed-Solomon (outer) concatenated with convolutional (inner) code Turbo codes: 1/2, 1/3, and 1/4 (1.6 Mbps max); not available for near-Earth Ka-band Turbo code: 1/6 (1 Mbps max); not available for near-Earth Ka-band Low Density Parity Code (LDPC): ½, 2/3, 4/5, 7/8 (10 Msps, max); not available for near-Earth Ka-band.[19]

[19] LDPC code will be available in 2018, with a firm commitment on code rate ½ to support Human Space Flight mission. Availability of other code rates (2/3, 4/5, 7/8) may extend beyond 2018.

Parameter	Value
Data Format, from Spacecraft to the DSN	CCSDS TM Synchronization and Channel Coding (ref. CCSDS 131.0-B-1) Transfer frame format conforming to CCSDS TM Space Data Link Protocol (ref. CCSDS 132.0-B-1) VCDUs conforming to CCSDS AOS Space Data Link Protocol (ref. CCSDS 732.0-B-2)
Data Format, from DSN to MOC	Stream of frames or VCDUs
Data Unit Size (information bits only)	TM frame or VDCU: 8920 bits (nominal), 1760 bits (safing and critical events), 16 kbits (maximum)
Maximum Number Of Virtual Channels Supported	64 (16 virtual channels can be processed at a given time)
Data Retention Period at the DSN	Nominal 14 days after acquisition[20].
Data Delivery Methods from the DSN to the MOC	CCSDS Space Link Extension (SLE) RAF/RCF (ref. CCSDS 911.1-B-2 and 911.2-B-2) On-line timely On-line complete Off-line
Data Delivery Latency (DSN to MOC)	Engineering telemetry: Typically on-line timely (seconds) and on-line complete (hours) Science telemetry: Typically off-line (hours to 24 hours). Note: Latency commitment limited by bandwidth from DSN to project MOS
Service Operating Mode	Automated
Service Availability	Nominal: 95% Mission critical event: 98%
Data Quality†	Frame rejection rate: 10^{-4} to 10^{-5} typical
Time Tagging Accuracy	10-50 microseconds in Earth Receive Time (ERT) relative to UTC, depending on downlink data rate
Accountability Reporting	SLE RAF/RCF status report Frame accountability report 0199-Telecomm, 0206-Telecomm-SLE
Ground Communication Interface Methods	Refer to Section 3.8

* OQPSK is equivalent to SQPSK (Staggered Quadrature Phase Shift Keying)
† Error rates depend on sufficiently received SNR

[20] Longer retention period due to mission-specific need could be negotiated, subject to data volume constraint.

3.2.3 Telemetry Packet Service

The Packet service extracts packets from frames, i.e., virtual channel data units (VCDUs), and delivers them to the customer's MOS. In essence, it includes the functionality of the lower services, i.e., telemetry frame service and telemetry packet extraction capability. The customer's spacecraft must comply with the CCSDS packet telemetry recommendation[21] in order to use this service. The following output options are available for Packet service:

- Extracted packets are ordered by Earth received time (ERT)
- Extracted packets are ordered by a combination of user-specified mission parameters (e.g., application identifier, packet generation time, packet sequence number, etc.)

Note: This order is a non-real time query.

Note that the Packet Service subsumes the Frame Service; a separate subscription to the latter is not needed. Also note that Packet Service may require an adaptation that is paid for by the mission.

Table 3.6 contains a set of attributes summarizing the functions, performance, and interfaces for the Telemetry Packet Service. Relevant documents for this service are also identified in the table

Table 3-6. Attributes of Telemetry Packet Service

Parameter	Value
Frequency Bands Supported	Near-Earth S, X, Ka[22] Deep space S, X, Ka
G/T @ 45 Degree Elevation, diplexed (refer to Table 5.1)	S-Band G/T (dB) 34m BWG 40.8 34m HEF 39.4 70m 49.8 X-Band G/T (dB) 34m BWG 54.2 34m HEF 53.2 70m 61.5 Ka-Band G/T (dB) 34m BWG (deep space, 32 GHz) 61.1 34m BWG (near Earth, 26 GHz) 58.2
Polarizations Supported	RCP LCP RCP/LCP simultaneity at some stations for S-, X-, and deep space Ka-band.
Modulation Types	PSK on residual carrier (with or without subcarrier) BPSK on suppressed carrier (no ranging) QPSK, OQPSK (no ranging)
Modulation Formats	NRZ: L, M, S; Bi-phase L or Manchester, M, S

[21] Packet Telemetry Services, CCSDS 103.0-B-1, Blue Book, May 1996

[22] Near-Earth Ka-band can be concurrently received with S-band, but not X-band

Parameter	Value
Carrier/Subcarrier Waveform	Residual carrier: sine or square wave
Downlink Data Rate (Information and redundancy)	Maximum: 150 Mbps for near Earth Ka-band 10 Mbps for other frequencies Minimum: 10 bps (> 40 bps recommended for timely acquisition)
Downlink Symbol Rate	Maximum: 350 Msps for near Earth Ka-band (with ½ code) 20 Msps for other frequencies (with ½ code) Minimum: 20 sps (with ½ code)
Forward Error Correction	Convolutional codes: (k=7, r=1/2), without punctured code option Reed-Solomon (RS) interleave = 1 to 8 Reed-Solomon (RS) without convolutional code Reed-Solomon (outer) concatenated with convolutional (inner) code Turbo codes: 1/2, 1/3, and 1/4 (1.6 Mbps max); not available for near-Earth Ka-band Turbo code: 1/6 (1 Mbps max); not available for near-Earth Ka-band Low Density Parity Code (LDPC): ½, 2/3, 4/5, 7/8 (10 Msps, max); not available for near-Earth Ka-band.[23]
Data Format, from Spacecraft to DSN	Packets conforming to CCSDS TM Space Packet Protocol (ref. CCSDS 133.0-B-1)
Data Format, from DSN to MOC	Queried packets
Data Unit Size	TM packet: maximum of 30 kbytes plus SFDU header
Maximum Number Of Virtual Channels Supported	64 (16 virtual channels can be processed at a given time)
Data Retention Period at DSN	Nominal 14 days after acquisition.[24]
Data Delivery Methods from the DSN to the MOC	Query access to the database, on-line during the pass or off-line after the pass
Data Delivery Latency (DSN to MOC)	Engineering telemetry: Typically on-line timely (seconds) and complete (seconds to 5 minutes) Science telemetry: Typically off-line (hours to 24 hours). Note: Latency commitment limited by bandwidth from DSN to project MOS.
Service Operating Mode	Automated

[23] LDPC code will be available in 2018, with a firm commitment on code rate ½ to support Human Space Flight mission. Availability of other code rates (2/3, 4/5, 7/8) may extend beyond 2018.

[24] Longer retention period due to mission-specific need could be negotiated, subject to data volume constraint.

Parameter	Value
Service Availability	Nominal: 95% Mission critical event: 98%
Data Quality†	Frame rejection rate: 10^{-4} to 10^{-5} (typical)
Time Tagging Accuracy	10-50 microseconds in Earth Receive Time (ERT) relative to UTC, depending on downlink data rate
Accountability Reporting	Gap report
Ground Communication Interface Methods	Refer to Section 3.8
DSN Interface Specifications	DSN document 810-005; 810-007; 820-013 0172-Telecomm

† Error rates depend on sufficiently received SNR

3.2.4 Telemetry File Service

The Telemetry File service recovers files transmitted according to the CCSDS File Delivery Protocol (CFDP)[25]. The service extracts Protocol Data Units (PDUs) from packets and re-assembles the PDUs into files. The resulting files are then made available to the customer's MOS, along with the meta-data contained within the transaction and the metadata summarizing the file contents and the time of receipt of the initial and final PDUs. This service also supports transfer of directory listings, file transmission status, and other messages as specified in the protocol. The Telemetry File service can operate in either of two basic modes:

- Unacknowledged mode – In this mode, missing PDUs or other uncorrected errors in transmission are not reported to the spacecraft. This mode thus requires neither use of an uplink nor interactive response from the spacecraft. However, missed data will not be automatically retransmitted. This is referred to in the CCSDS specification as "unreliable transfer". The file will be delivered with transactions contained metadata and the transaction completeness data.

- Acknowledged mode – This mode guarantees complete file transfer within the parameters established for the protocol. The DSN will automatically notify the MOS if file segments or ancillary data are not successfully received (i.e., PDUs are missing or malformed); the notification is done using the SLE Return PDU (RPDU) interface[26]. The DSN can also automatically respond to the spacecraft with acknowledgement or non-acknowledgement PDUs. The spacecraft can then retransmit the missed items, and the DSN will combine them with the portions that were previously received. Acknowledged mode requires use of an uplink and that the spacecraft cooperate in accord with the CFDP specification. This is referred to in the CCSDS specification as "reliable transfer".

CFDP is a content-independent protocol, which requires no knowledge about the content or structure of a transferred file. The time needed to deliver a final, complete file via the CFDP is a function of the file size, data rate, and round-trip-light-time effect (this is particularly significant in the case of the acknowledged mode).

[25] CCSDS File Delivery Protocol (CFDP), CCSDS 727.0-B-4, Blue Book, January 2007

[26] Deep Space Network / Detailed Interface Design, Document No. 820-013, 0213-Telecomm-CFDP, "Deep Space Network (DSN) Interface for CCSDS File Delivery Protocol (CFDP)"

Note that the File Service subsumes the Frame and Packet Services; separate subscription to the latter is not needed. Also note that File Service may require an adaptation that is paid for by the mission.

Table 3.7 contains a set of attributes summarizing the functions, performance, and interfaces for the Telemetry File Service. Relevant documents for this service are also identified in the table.

Table 3-7. Attributes of Telemetry File Service

Parameter	Value
Frequency Bands Supported	Near-Earth S, X, Ka[27] Deep space S, X, Ka
G/T @ 45 Degree Elevation, diplexed (refer to Table 5.1)	S-Band G/T (dB) 34m BWG 40.8 34m HEF 39.4 70m 49.8 X-Band G/T (dB) 34m BWG 54.2 34m HEF 53.2 70m 61.5 Ka-Band G/T (dB) 34m BWG (deep space, 32 GHz) 61.1 34m BWG (near Earth, 26 GHz) 58.2
Polarizations Supported	RCP LCP RCP/LCP simultaneity at some stations for S-, X- and deep space Ka-band.
Modulation Types	PSK on residual carrier (with or without subcarrier) BPSK on suppressed carrier (no ranging) QPSK, OQPSK (no ranging)
Modulation Formats	NRZ: L, M, S Bi-phase L or Manchester, M, S
Carrier/Subcarrier Waveform	Residual carrier: sine or square wave
Downlink Data Rate (Information and redundancy)	Maximum: 150 Mbps for near Earth Ka-band 10 Mbps for other frequencies Minimum: 10 bps (> 40 bps recommended for timely acquisition)
Downlink Symbol Rate	Maximum: 300 Msps for near Earth Ka-band (with ½ code) 20 Msps for other frequencies (with ½ code) Minimum: 20 sps (with ½ code)

[27] Near-Earth Ka-band can be concurrently received with S-band, but not X-band

Parameter	Value
Forward Error Correction	Convolutional codes: (k=7, r=1/2), without punctured code option Reed-Solomon (RS) interleave = 1 to 8 Reed-Solomon (RS) without convolutional code Reed-Solomon (outer) concatenated with convolutional (inner) code Turbo codes: 1/2, 1/3, and 1/4 (1.6 Mbps max); not available for near-Earth Ka-band Turbo code: 1/6 (1 Mbps max); not available for near-Earth Ka-band Low Density Parity Code (LDPC): ½, 2/3, 4/5, 7/8 (10 Msps, max); not available for near-Earth Ka-band.[28]
Data Format, from Spacecraft to DSN	Files per CCSDS File Delivery Protocol (CFDP) standard (ref. CCSDS 727.0-B-4)
Data Format, from DSN to MOC	Files
Data Unit Size	Maximum PDU size: 30 kbytes, Maximum file size: 4Gbytes
Maximum Number Of Virtual Channels Supported	64 (16 virtual channels can be processed at a given time)
Data Retention Period at DSN	Nominal 14 days after acquisition.[29]
Data Delivery Methods from the DSN to the MOC	File transfer on-line during the pass or off-line after the pass
Data Delivery Latency (DSN to MOC)	File products: varied from minutes to hours, depending on file size and structure. Note: Latency commitment limited by bandwidth from DSN to project MOS.
Service Operating Mode	Automated
Service Availability	Nominal: 95% Mission critical event: 98%
Data Completeness	99.99% for acknowledged service mode (guaranteed delivery)
Data Quality†	Frame rejection rate: 10^{-4} to 10^{-5} (typical)
Time Tagging Accuracy	10-50 microseconds in Earth Receive Time (ERT) relative to UTC, depending on downlink data rate
Accountability Reporting	Radiation log, event report, and CFDP transaction log 0188-Telecomm-CFDP
Ground Communication Interface Methods	Refer to Section 3.8

[28] LDPC code will be available in 2018, with a firm commitment on code rate ½ to support Human Space Flight mission. Availability of other code rates (2/3, 4/5, 7/8) may extend beyond 2018.

[29] Longer retention period due to mission-specific need could be negotiated, subject to data volume constraint.

Parameter	Value
DSN Interface Specifications	DSN documents 810-005; 810-007, 820-013 0213-Telecomm-CFDP

† Error rates depend on sufficiently received SNR

3.2.5 Beacon Tone Service

The DSN provides the Beacon Tone Service for the flight project MOS to monitor the high-level state of the spacecraft according to the beacon tones generated and transmitted by the spacecraft. The DSN is capable of acquiring and detecting the 4-tone Beacon Monitoring signals at SNRs down to 5 dB-Hz, with detection time up to 1000 seconds. The detected tone will be forwarded to the project MOS as a message[30]. However, the interpretation of the detected tone is the responsibility of the MOS.

There are some missions, which have a long cruise and/or require frequent visibility during periods when the downlink signals drops below threshold for normal telemetry (for example, below a Pt/No of about 18 dB-Hz). In these scenarios, the Beacon Tone Service offers a useful mechanism for the MOS to gain some minimum knowledge about the health and safety of its spacecraft.

This service does not include the capability to detect a large number of tones in challenging low signal level and high dynamics condition that is typically needed for mission's Entry Descent Landing (EDL) support. See section 3.5.2 Radio Science Data Acquisition Service.

3.2.6 Relay Data Service

The DSN provides Relay Data Services to deliver telemetry data relayed by an relaying spacecraft to a ground station. An example is a lander data being relayed by another orbiting spacecraft, or an spacecraft data being relayed by another spacecraft. The DSN would extract the relayed data from a relaying telemetry stream and deliver the data to the source mission's MOC.

The relaying spacecraft must place the data from the source spacecraft in separate Virtual Channels (VCs) different from the VCs used by the relaying spacecraft's data. The Relay Data Service provides the source spacecraft's data either as packets (Packet Service) or as files (File Service). In addition to using standard DSN assets (antennas), this service can retrieve relay data that have been downlinked to non-DSN antennas (e.g., ESA 35m antennas); this does require agreements be made with the organization that controls the non-DSN antennas.

Note that the Relay Data Service may require an adaptation that is paid for by the mission.

3.3 Tracking Services

Tracking Services provide radio metric observables from which the position and velocity of the customer's spacecraft can be derived. Two complementary types of service are available – Validated Radio Metric Data service and Delta-DOR service.

Table 3.8 contains a set of attributes summarizing the functions, performance, and interfaces for Tracking Services. Relevant documents for these services are also identified in the table.

[30] Deep Space Network / Detailed Interface Design, Document No. 820-013, 0233-Telecomm, "Return Beacon Tone Service Interface"

Table 3-8. Attributes of all Tracking Services

Parameter	Value
Frequency Bands Supported	Uplink: S, X, Ka* Downlink: S, X, Ka (S and X for both near Earth and deep space bands; Ka for deep space band only)
Frequency Turnaround Ratio (Uplink/Downlink)	S/S: 240/221 S/X: 880/221 X/X: 880/749 X/Ka: 3344/749, 3360/749 Ka/Ka: 3360/3599
Tracking Data Types	Range, Doppler, Delta-DOR. Angle (mainly for initial acquisition during LEOP)
Tracking Modes	Coherent Non-Coherent
Doppler Accuracy[31] (1σ Error)	S-band: 0.2 mm/s, 60s Compression X-band: 0.05 mm/s, 60s Compression Ka-band: 0.05 mm/s, 60s Compression
Doppler Measurement Rate	0.1 second
Ranging Type	Sequential Ranging, Pseudo-noise
Range Accuracy (1σ Error)	1 meter
Delta-DOR Accuracy (1σ Error)	S-Band: 37.6 nrad (0.3 m) X-Band: 2.5 nrad each for systematic and random errors (0.04 m) Ka-Band: 2.5 nrad each for systematic and random errors (0.04 m)
Downlink Carrier Level	Residual: 10 dB Loop SNR minimum Suppressed: 17 dB Loop SNR minimum QPSK/OQPSK: 23 dB Loop SNR minimum
Range Power Level	+50 to -10 dB Hz (P_r/No)
Delta-DOR Tone Power Level	18 dB Hz (P_T/No) minimum
Service Availability	Doppler/Range: 95% Non-Critical Support 98% Critical Support Delta-DOR: 90% Non-Critical Support 95% Critical Support
Data Latency	Doppler/Range: 5 minutes Delta-DOR: 24 hours
Delivery Method (DSN to MOC)	Stream data mode File data mode
Ground Communication Interface Methods	Refer to Section 3.8

[31] Module 202, 34-m and 70-m Doppler, DSN Telecommunications Link Design Handbook, Document No. 810-005, Rev. E, Jet Propulsion Laboratory, Pasadena, California.

Parameter	Value
DSN Interface Specifications	DSN document 810-005; 810-007; 820-013 TRK-2-34 or 0212-Tracking-TDM

* Ka-band uplink is available only at DSS-25. It is carrier-only, without command or range modulation, and is intended for Radio Science applications for Juno mission. Support to future missions beyond Juno is subject to negotiation.

3.3.1 Validated Radio Metric Data Service

The Validated Radio Metric Data Service includes validation and correction of erroneous configuration and associated status data, analysis of radio metric data including validation against the Spacecraft Ephemeris and Solar System Ephemeris, retrieval of missing data, and delivery of re-conditioned data to navigation. Data which cannot be validated may be delivered to the customer, but are identified as such. All Doppler and ranging data are validated, and all data are delivered in the same DSN format, 0212-Tracking-TDM[32] and TRK-2-34[33].

3.3.1.1 Doppler Data Performance

Doppler data are the measure of the cumulative number of cycles of a spacecraft's carrier frequency received during a user specified count interval. The exact precision to which these measurements can be made is a function of received signal strength and station electronics, but is a small fraction of a cycle. In order to acquire Doppler data, the user must provide a reference trajectory, and information concerning the spacecraft's RF system to DSN to allow for the generation of pointing and frequency predictions.

The user specified count interval can vary from 0.1 sec to 60 minutes, with typical count times of 1 second to 5 minutes. The average rate-of-change of the cycle count over the count interval expresses a measurement of the average velocity of the spacecraft in the line between the antenna and the spacecraft. The accuracy of Doppler data is quoted in terms of how accurate this velocity measurement is over a 60 second count. The accuracy of data improves as the square root of the count interval.

3.3.1.2 Non-coherent Doppler Data

Non-coherent data (also known as one-way data) is data received from a spacecraft where the downlink carrier frequency is not based on an uplink signal. The ability of the tracking station to measure the phase of the received signal is the same for non-coherent versus coherent data types, however the uncertainty in the value of the reference frequency used to generate the carrier is generally the dominant error source.

3.3.1.3 Coherent Doppler Data

Coherent Doppler data is that received from a spacecraft where the reference frequency of the received carrier signal was based on a transmitted uplink signal from the Earth. This is commonly known as two-way data, when the receiving and transmitting ground stations are the same, and three-way data, when the transmitting and receiving stations are different. Since the frequency of the original source signal is known, this error source does not affect data accuracy. The accuracy of this data is a function primarily of the carrier frequency, but is affected by transmission media effects.

[32] Deep Space Network / Detailed Interface Design, Document No. 820-013, 0212-Tracking-TDM, "DSN Tracking Data Message (TDM) Interface"

[33] Deep Space Network / Detailed Interface Design, Document No. 820-013, TRK-2-34, "DSN Tracking System, Data Archival Format"

- S-band: S-band (2.2 GHz) data is available from the 70m and some 34m antennas. The one-sigma accuracy of S-band data is approximately 0.2 mm/s for a 60 second count interval after being calibrated for transmission media effects. The dominant systematic error which can affect S-band tracking data is ionospheric transmission delays. When the spacecraft is located angularly close to the Sun, with Sun-Probe-Earth (SPE) angles of less than 10 degrees, degradation of the data accuracy will occur. S-band data is generally unusable for SPE angles less than 5 degrees.
- X-band: X-band (8.4 GHz) data is available from the 34m and 70m antennas. X-band data provides substantially better accuracy than S-band. The one-sigma accuracy of a 60 second X-band Doppler measurement is approximately 0.05 mm/s. X-band data is less sensitive to ionospheric media delays but more sensitive to weather effects. X-band data is subject to degradation at SPE angles of less than 5 degrees, but is still usable with accuracies of 1 to 5 mm/s at SPE angles of 1 degree.
- Ka-band: Doppler accuracy at Ka-band (32 GHz) is mostly affected by the SPE angle, and for X-band uplink/Ka-band downlink mode the one-sigma accuracy is near that as described in X-band uplink/X-band downlink.

The level of errors stated above is based on the assumption of the minimum of 15 dB uplink carrier loop signal-to-noise ratio, and 10 dB downlink carrier loop signal-to-noise ratio for residual carrier tracking (or 17 dB for suppressed carrier tracking).

3.3.1.4 Ranging Data Performance

Ranging data measures the time that it takes a series of signals superimposed upon the uplink carrier frequency to reach the spacecraft, be retransmitted, and then received at an Earth station (round-trip-light-time, RTLT). As such, all DSN ranging systems are intrinsically coherent.

The user of ranging data service must define two of three required parameters: the desired accuracy, the desired range measurement ambiguity, and the maximum observation time. These along with the knowledge of the received ranging power-to-noise ratio will allow for the configuration of the ranging system.

3.3.1.4.1 Sequential Ranging

The sequential ranging technique can provide measurements of the range to the spacecraft to 1 meter accuracy for all bands. Note that ranging error is conditioned on range configuration setting, e.g., choice of ranging components and integration time.

The sequential ranging technique modulates a series of codes upon the radio signal to the spacecraft. The first of these, the "clock code," defines the resolution or accuracy that the ranging measurement will have. However, the observation from the clock code is ambiguous as it only identifies the fractional part of the clock code period comprising the RTLT, there are an unknown additional integer number of clock periods composing the RTLT. The DSN then sequentially modulates a decreasing series of lower frequency codes upon the signal in order to resolve the ambiguity in the range measurement, by increasing the period of the ranging code. The maximum range ambiguity possible in the DSN is approximately 152,000 km, however ambiguities of 1,190 km and 2,380 km are more commonly used.

The accuracy of a ranging observation is a function of the received power-to-noise ratio in the ranging signal. Greater accuracy can be achieved by observing the "clock code" signal for a longer period of time. For lower power-to-noise ratios it also takes longer to resolve each of the ambiguity resolution codes. Consequently, for a given power-to-noise ratio, a desired accuracy and a desired ambiguity will result in a required observation time. For practical purposes the maximum value for this observation time is 30 minutes. If the desired accuracy and desired ambiguity result in a required observation time greater

than 30 minutes, either a change in the ambiguity or the accuracy will be required. A more detailed description is provided in the DSN Telecommunications Link Design Handbook[34].

3.3.1.4.2 Pseudo-noise Ranging

The DSN supports two forms of pseudo-noise ranging: non-regenerative and regenerative. Non-regenerative ranging requires no special processing onboard spacecraft, similar to sequential ranging operations. Regenerative ranging, on the other hand, requires the spacecraft to demodulate the uplink ranging signal and regenerate it on the downlink. A higher signal condition, resulted from the ranging regeneration, offers a performance advantage over the non-regenerative or sequential ranging technique. More information is provided in the DSN Telecommunications Link Design Handbook [35]

3.3.1.5 Grades of Service – Latency and Quality

There are, in effect, two grades of service for the Validated Radio Metric Data Service:

- Grade 1 corresponds to the output data that has passed through the automated validation process which ensures that configuration meta-data is complete and consistent to some specified level of confidence. Grade 1 may be delivered via a real-time interface (with latency less than or equal to 5 minutes 99% of the time) or via a file-drop interface (with longer latency). Grade 1 is available in TRK-2-34 format.
- Grade 2 corresponds to the output data that has additionally passed through the manual validation process, which utilizes short-arc (about 1 tracking pass) fits to identify anomalous data. Delivery is via a file-drop interface similar to that used for Grade 1. Grade 2 is available in either 0212-Tracking-TDM or TRK-2-34 file formats. Latency for Grade 2 is nominally 24 hours, with an option to negotiate for 30- to 60-minute turnaround for mission critical events.

3.3.2 Delta-DOR Service

The delta-differential one-way ranging (delta-DOR) technique provides an observation of the plane-of-the-sky position of a spacecraft, using signals received simultaneously at two or more antennas. In this technique, a spacecraft emits two or more side tones separated from its carrier by a large frequency offset, typically tens of MHz or more. Each of these tones is recorded at two stations simultaneously. Nearly contemporaneously, a quasar is observed with the same pair of stations (this may be done in the pattern quasar-spacecraft-quasar, spacecraft-quasar-spacecraft, quasar-spacecraft_1-spacecraft_2-quasar, etc.). The signals are analyzed afterwards to calculate the delta-DOR observable.

Due to the need to model the geometry of the observation of each radio source, a separate time delay observable is reported for each source and for each measurement time. The inter-station clock offset is also provided to the customer. The data are delivered in the DSN format, 820-013 TRK-2-34[36]. Quality assessments are also provided with the data, based on a large number of quality indicators both taken with the data and inferred during signal processing.

To receive validated delta-DOR data, the subscriber negotiates the times of spacecraft and quasar observations, and requests the service. A number of factors must be considered concerning the time and geometry of the session in order to obtain successful results; therefore DSN provides assistance in the scheduling. The subscriber then arranges that the spacecraft DOR tones to be turned on, with sufficient tone power signal-to-noise ratio. Important side effects of the delta-DOR session are:

---

[34] Module 203, Sequential Ranging, DSN Telecommunications Link Design Handbook, Document No. 810-005, Rev. E, Jet Propulsion Laboratory, Pasadena, California

[35] Module 214, Pseudonoise and Regenerative Ranging, DSN Telecommunications Link Design Handbook, Document No. 810-005, Rev. E, Jet Propulsion Laboratory, Pasadena, California

[36] Deep Space Network / Detailed Interface Design, Document No. 820-013, TRK-2-34, "DSN Tracking System, Data Archival Format"

- Spacecraft telemetry may be degraded when the DOR tones are on, *and*
- All other radio services (telemetry, command, radio metrics) will *not* be available during the quasar observations, because the ground antennas will be pointing away from the spacecraft.

3.3.2.1 Delta-DOR Data Performance

Assuming sufficient signal detection, the delta-DOR measurements are expected to have the following accuracy:

- 0.3 m at S-band, assuming a minimum 7 MHz DOR tones separation
- 0.04 m (or 2.5 nrad for each random and systematic errors) at X-band, assuming a minimum 20 MHz DOR tones separation
- 0.04 m (or 2.5 nrad for each random and systematic errors) at Ka-band, assuming a minimum 80 MHz DOR tones separation

The above values further assume a condition of sufficient signal detection and minimal interference, e.g., a received tone power signal-to-noise ratio of 18 dB Hz or greater, for spacecraft/Sun separation angle of at least 20 degrees, for a spacecraft trajectory within 10 deg of the ecliptic plane, and for spacecraft geocentric declination angles above -15 deg.

3.4 Calibration and Modeling Services

This service provides the subscriber with calibrations needed to process tracking data to the fullest accuracy possible. Calibrations specifically related to the data acquisition hardware are automatically delivered to subscribers of those data. These calibrations deal with systematic error sources, which affect the accuracy of tracking observables.

3.4.1 Platform Calibration Service

Platform Calibration Service provides Earth orientation parameters (EOP) data referenced to the terrestrial and celestial frames. In order to process DSN radio metric data, the subscriber must know the inertial position of the station at the time of the measurement. Although the locations of DSN antennas are known to within centimeters and the baselines between them to millimeters, the variations in polar motion and the rotation rate of the Earth can move the inertial position by a much larger amount than this. The terrestrial frame tie data provides a temporal model for the orientation of the Earth's pole and the spin rate based upon VLBI observations and tracking of GPS satellites. This data provides the subscriber with an instantaneous knowledge of the inertial position of a crust fixed location on the Earth's equator to 30 cm. A posterior knowledge on the order of 5 cm (1-sigma) is available after 14 days.

For Earth orientation parameters (EOP), the accuracy of the polar motion parameters (PMX and PMY) is within 5 cm (1-sigma) and the spin parameter (UT1) is within 30 cm (1-sigma) in real-time.

A quasi-inertial celestial reference frame in International Earth Rotation and Reference Systems (IERS) format referenced to epoch J2000 is provided with an accuracy to better than 1 nrad (1-sigma) with a measured stability of better than 0.1 nrad/year (1-sigma).

Typically, platform calibration data, i.e., EOP data and reference frame tie data, are delivered twice a week (refer to DSN document 820-013, TRK-2-21, "DSN Tracking System Earth Orientation Parameters Data Interface" for more details).

3.4.2 Media Calibration Service

The transmission media through which the signals pass affects radio signals. The most significant of these are the Earth's troposphere and ionosphere. In order to achieve the data accuracies discussed in the

previous sections on data services, it is necessary to calculate adjustments for the delays due to atmospheric effects.

Calibrations are generated once per day for all users, with a latency of 2 hours post real time for troposphere calibrations and 6 hours post real time for ionosphere calibrations. Quick-look calibrations are delivered to all users within one hour of creation. The operator typically delivers calibrations that have been validated visually to users twice per week, or more often during critical periods as negotiated. (Refer to DSN document 820-013, TRK-2-23, "Media Calibration Interface" for more details.)

3.4.2.1 Ionosphere Calibrations

Ionosphere calibrations are created by tracking dual-frequency GPS signals to determine the ionospheric Total Electron Content (TEC) along the GPS lines of sight from a global network of receivers, fitting a Global Ionospheric Map (GIM) to the TEC data, and using the GIM to calibrate the specific spacecraft lines of sight desired. One calibration is created for each tracking pass, in the form of a normalized polynomial in time that represents the line-of-sight ionospheric delay between the spacecraft and tracking site in meters at S-band. The calibration accuracy is 5 TEC (one-sigma) averaged over a standard Doppler tracking pass, which corresponds to roughly 0.2 cm at Ka-band, 3 cm at X-band, and 38 cm at S-band.

3.4.2.2 Troposphere Calibrations

Troposphere calibrations are derived from GPS-based estimates of the total zenith tropospheric delay and meteorological data that allow the total delay to be separated into two components: the hydrostatic (or "dry") delay due to induced dipoles in all atmospheric gasses and the "wet" delay due to the permanent dipole in atmospheric water vapor. For each DSCC, a series of time-contiguous wet and dry calibration pairs that collectively cover all 24 hours of each day is created. Each calibration takes the form of a normalized polynomial in time that represents the zenith wet or dry tropospheric delay in meters. Users then apply known wet and dry elevation mapping functions to scale the zenith delays to the elevation angle of the spacecraft. The calibration accuracy is 1 cm (one sigma, zenith, wet plus dry) for all times through the end of the Universal Time (UT) day before their delivery and 2 cm (one sigma, zenith, wet plus dry) for subsequent times on the day of delivery.

3.5 Radio Science Services

DSN Radio Science Services are provided to scientists to enable them to use the Deep Space Network for direct scientific observations. The services deliver measurements of the spacecraft downlink signal from open-loop receivers. Data from the open-loop receiver are digital recordings of the baseband signal derived from the received spacecraft signal at S-, X-, or Ka-band (refer to DSN document 820-013, 0159-Science, "Radio Science Receiver Standard Formatted Data Unit" for more details). Note that Doppler frequency and spacecraft range from the closed-loop receiver are at time relevant to radio science experiments. Subscription of these data sets is done via Tracking Services.

Table 3.9 describes some key attributes on the functions, performance, and interfaces for Radio Science Services. More information can be found in the DSN Telecommunication Link Design Handbook[37].

The Radio Science Services are further divided into two types of service based on the level of operational activities involved.

[37] Module 209, Radio Science, DSN Telecommunications Link Design Handbook, Document No. 810-005, Rev. E, Jet Propulsion Laboratory, Pasadena, California

3.5.1 Experiment Access Service

Experiment Access Service is aimed at users with expertise in the DSN science capabilities and provides them with access to the equipment and technical assistance, including operations support and scientific collaboration when appropriate, to perform their experiments. In some cases access can be via remote operations terminals, rather than onsite. The antenna is scheduled, configured, and pointed by DSN Operations; the user is responsible for configuring and controlling the open loop receiver equipment.

3.5.2 Data Acquisition Service

Data Acquisition Service provides raw measurements and ancillary data from observations. DSN provides scheduling, experiment design, instrument operations, and data delivery based on agreements negotiated prior to the observations. Data Acquisition service subsumes Experiment Access service--separate subscription to the latter is not required. In this case, DSN Operations runs the entire experiment (including the open loop receiver equipment) and the data are provided to the user. This service is also used to support mission critical events such as entry descent landing or spacecraft emergency search.

Table 3-9. Attributes of Radio Science Services

Parameter	Value
Frequency Bands Supported	S, X, Ka (32 GHz) - all in deep space bands.
Capture Bandwidth	1 kHz – 2 MHz, selectable
Frequency Stability	2-way: $7x10^{-13}$ (1s), $2\ x10^{-13}$ (10s), $3\ x10^{-14}$ (100s), $5\ x10^{-15}$ (1000s)
Amplitude Stability	0.25 dB over 30 minutes (1 sigma)
Phase Noise, dBc-Hz	S- & X-band: -63 dBc (1Hz), -69 dBc (10 Hz), -70 dBc (100 Hz) Ka-band: -50 dBc (1Hz), -55 dBc (10 Hz), -57 dBc (100 Hz)
Service Availability	95% Non-Critical Support 98% Critical Support
Data Latency	Few hours after pass; variable per bandwidth selection
Delivery Modes	Stream and file
DSN Interface Specifications	DSN document 810-005; 820-013 0159-Science

3.6 Radio Astronomy/VLBI Services

The Radio Astronomy/VLBI Services uses the high gain, low system noise temperature antennas of the DSN to make observations of RF emitting astronomical sources. The Radio Astronomy capabilities are intimately related to the DSN's R&D programs in science and technology. For observations within standard DSN communications bands, users are provided conditioned IF signals. These IF signals can then become input to either DSN-supplied special purpose receiving and data acquisition equipment being used for R&D or user supplied equipment. For observations outside the standard communications bands, investigators can use special purpose R&D microwave and receiving equipment, when available.

Radio Astronomers using DSN antennas as part of a network in Very Long Baseline Interferometry (VLBI) observations receive digitized and formatted samples of an open-loop signal on Mark-5 disks. The data could then be correlated with other non-DSN antenna signals at the experimenter's facility. Conversely, the DSN can do the correlation of signals from DSN and non-DSN antennas, or among non-DSN antennas, provided that the data inputs comply to the DSN interface specifications.

The Radio Astronomy/VLBI Services can be categorized into three types of services.

3.6.1 Signal Capturing Service

The Signal Capture Service provides antenna pointing, radio frequency output, and/or output at an intermediate frequency (down-converted from RF) for observations of natural radio emitters. R&D equipment, external to this service, is used to complete signal processing and data acquisition. Amplification and down-conversion of signals is available at "standard" DSN communications frequencies defined in the DSN Telecommunication Link Design Handbook. Use of special-purpose R&D equipment for observations at other frequencies and bands may be negotiated through the DSN/Mission Services Planning and Management Office.

3.6.2 VLBI Data Acquisition Service

The VLBI Data Acquisition Service includes signal capture, data acquisition and recording. The recorded Mark-5 data format is a standard used at radio observatories throughout the world and is described in the Appendix C – Service Interfaces. This service includes delivery of data to a user-designated correlator.

3.6.3 VLBI Data Correlation Service

The VLBI Data Correlation service provides the capability to cross correlate up to 2 data streams in the Mark-5 disk format.

Key performance characteristics of VLBI services in terms of accuracy of VLBI measurements are described in the DSN Telecommunication Link Design Handbook[38].

3.7 Radar Science Services

The DSN Radar Science Services are provided to scientists to enable them to use the Deep Space Network for direct scientific observations. It is the only fully steerable planetary radar system in the world. This characteristic makes it extremely valuable for observations of Near-Earth asteroids and comets which typically encounter the Earth at a wide variety of declinations.

[38] Module 211, Wide Channel Bandwidth VLBI, DSN Telecommunications Link Design Handbook, Document No. 810-005, Rev. E, Jet Propulsion Laboratory, Pasadena, California

The Radar Service provides observations from the Goldstone Solar System Radar (GSSR) with dual wavelength (3.5 cm and 12.5 cm), multi-aperture, high power, and simultaneous dual polarization reception (RCP and LCP). The GSSR can be operated in continuous wave, binary phase coded, and chirp modulation modes. Interferometric observations using up to four DSN receiving antennas are possible, as are bi-static observations with the radar at the Arecibo Observatory, the Greenbank Telescope, and others.

The GSSR transmitter at DSS-14 can be used at either 3.5 cm or 12.5 cm, and it can supply either right or left circular polarization. The available modulations fall into four categories:

- Continuous Wave – The GSSR can transmit a pure continuous tone, or "frequency hopping" may be used. In the latter case, the frequency is stepped periodically by a few KHz as a means to compensate for frequency-dependent variations in the amplifier gain.
- Binary Phase Coded (BPC) Modulation – Pseudo-random binary sequences with a variety of lengths and chip rates may be selected for 180° (suppressed carrier) phase modulation.
- Linear Frequency Modulation (LFM or "chirp") – A saw-tooth frequency ramp is available, with a variety of frequency intervals (bandwidth) and repetition rates.
- Arbitrary Waveform – Any relatively short periodic modulation can be created by an arbitrary waveform generator. For example, a specific triangular-shaped frequency ramp is used to support Orbital Debris Radar experiments.

With each of these modulations, Doppler compensation may be applied either via pre-distortion of the transmitted waveform, or via signal processing at the receiver.

The GSSR may receive and analyze signals with from several antennas, either alone or in combination. The receivers at DSS-14 and DSS-13 can be configured for both or either circular polarization. DSS-15 and the antennas at the Apollo complex (DSS-24, DSS-25, and DSS-26) can only receive a single polarization, either RCP or LCP at the experimenter's choice.

For interferometric observations, the GSSR can use the following baselines at the Goldstone Deep Space Communications Complex: DSS-14 to DSS-13, DSS-13 to Apollo, DSS-13 to DSS-15, DSS-15 to Apollo, and DSS-14 to Apollo. The DSS-14 to DSS-15 baseline can also be used, though it is short. In addition the GSSR's transmitted signal may be received at Arecibo, Green Bank, the Very Large Array (VLA) of the National Radio Astronomy Observatories (NRAO, Socorro, NM) and the Very Large Baseline Array.

The Radar Science Services are further divided into two types of service based on the level of operational activities involved.

3.7.1 Experiment Access Service

The first level of service is aimed at users with expertise in the DSN science capabilities. The service provides them with access to the equipment and technical assistance, including operations support and scientific collaboration when appropriate, to perform their experiments. In some cases, access can be via remote operations terminals, rather than on site. The antenna is scheduled, configured, and pointed by DSN Operations; the user is responsible for configuring and controlling the GSSR equipment.

3.7.2 Data Acquisition Service

The second level of service provides raw measurements and ancillary data from observations. DSN provides scheduling, experiment design, instrument operations, and data delivery based on agreements negotiated prior to the observations. Data Acquisition service subsumes Experiment Access service. Separate subscription to the latter is not required. In this case, DSN Operations runs the entire experiment (including the GSSR equipment) and the data are provided to the user.

3.8 Ground Communications Interface

The Ground Communications Interface is not a service. It is an underlying function of the various DSN services in that it must be performed by both the DSN, as the service provider, and the MOC, as the service user, so that service data, e.g., telemetry, command, and tracking data, can be transferred via a reliable and secure communications interface between a DSN site or the DSN DSOC and the Project MOS. This function encompasses the ground communication interface at the physical, data link, and network layers. To provide the interface, four different approaches are available:

a) Using the NASA Integrated Communications Services (NICS), as provided by the NASA Communications Services Office (CSO).

b) Using the dedicated communications link.

c) Using the Public Internet via a Virtual Private Network (VPN).

d) Using the JPL Flight Operations Network.

In addition, any combination of (a), (b), and (c) above may be applied.

The applicability to mission users, cost attribution, and roles and responsibilities pertaining to the four approaches are summarized in Table 3.10.

Table 3-10. Summary of the Approaches to Ground Communications Interface

	Applicable Mission Users Base	Cost Attribution	DSN's Role	Mission's Role
a) NICS	NASA missions only MOC with physical access to NICS backbone infrastructure	DSN for the NICS including terminating equipment at both ends (MOC and DSN) Mission users for the router at the MOC.	Broker for NICS connections. Plan with the CSO to provide and test the communications capability. Provide Flight Operation Network security.	Support the testing of NICS capability.
b) Dedicated Communications Link	NASA or non-NASA missions MOC at any geographical location	Mission users for communications line, terminating equipment at both ends (MOC and DSN), and the router at the MOC DSN for router at the DSN side	Support the mission to integrate & test the communications capability Provide Flight Operation Network security	Plan, procure, and install the communications line Integrate & test the end-to-end communications capability Maintain integrity of the communications path during operations
c) Public Internet (VPN)	NASA or non-NASA missions MOC at any geographical location	Mission users for Internet access at MOC; DSN for Internet access and security.	Support the mission to integrate & test the communications capability Provide Flight Operation Network	Plan and test the communications capability Maintain integrity of the communications path during operations

			security	
d) JPL Flight Operation Network	NASA JPL missions only MOC physically located at JPL	DSN for the Flight Operations Network ethernet backbone (DSN portion) and the connections of DSN equipment to the Ethernet Mission users / AMMOS for their connections to the Ethernet backbone	Total responsibility for the Flight Operation Network (DSN portion) Provide Flight Operation Network security Maintain Integrity of the communications path during operations	Support the integration & test of the interface between MOC and Flight Operations Network

3.9 Service Management

Data services provided by the DSN are requested and controlled via a unified service management function. Service management by itself is not a service. It is a distributed function with elements residing at the DSOC as well as at each of the DSCCs. It includes:

- Allocation and scheduling of space communication resources and assets during the service commitment and scheduling phases.
- Configuring, monitoring, and controlling the DSN assets during the service provision phase (i.e., before, during, and after a pass).
- Reporting of service execution results, including performance.

Customers interact with service management by one of the following:

- Generating a predicted spacecraft trajectory via an interface conforming to the CCSDS Orbit Ephemeris Message standard[39], or the Spacecraft-Planet Kernel (SPK) format[40] as defined in the 820-013, 0168-Service_Mgmt.
- Making schedule requests via an interface conforming to the Schedule Request, 820-013, OPS-6-12[41] or its variations.
- Providing spacecraft telecommunication events and link characteristics via interface conforming to the Keyword Files, OPS-6-13 document[42] or 820-13, 0211 Service Management-SEQ[43].
- Receiving link performance monitor data for the service instances being executed via the DSN Interface for Mission Monitor Data, 820-013, 0158-Monitor[44]

The DSN is continuing its evolution towards the goal of a single, integrated process for long-range resource allocation, mid-range scheduling, near-real-time scheduling, and real-time configuration and control, with a common "service request" interface.

[39] Orbit Data Messages, CCSDS 502.0-B-1, Blue Book, September 2004

[40] Deep Space Network / Detailed Interface Design, Document No. 820-013, 0168-Service_Mgmt, "DSN Web Portal Services"

[41] Deep Space Network / Detailed Interface Design, Document No. 820-013, OPS-6-12, "DSN Interface for Service Schedule"

[42] Deep Space Network / Detailed Interface Design, Document No. 820-013, OPS-6-13, "Flight Project Interface to the DSN for Sequence of Events Generation"

[43] Deep Space Network / Detailed Interface Design, Document No. 820-013, 0211-Service Mgmt-SEQ, "Flight Project Interface to the DSN for Sequence of Events Generation"

[44] Deep Space Network / Detailed Interface Design, Document No. 820-013, 0158-Monitor, "Deep Space Network Interface for Mission Monitor Data"

Section 4
Engineering Support

This section describes the engineering support activities offered by the DSN. Engineering support activities comprise participation in mission activities by DSN engineering personnel. Support can be provided during any phase of the mission life-cycle.

4.1 Systems Engineering Support

DSN engineering personnel can provide systems engineering support to missions to assist them in defining their end-to-end information system and mission operations system architecture, defining operations concepts, identifying system solutions, and defining interfaces.

4.2 Advance Mission Planning Support

DSN engineering personnel can assist future mission planners in identifying and verifying their requirements for DSN services, proposing and assessing telecommunication designs to ensure compatibility with the DSN, identifying optimal tracking and data acquisition approaches, and planning for mission system integration and test (I&T) and mission operations.

4.3 Emergency Mission Operations Center Hosting

For a customer subscribing to the use of the Emergency Control Center (ECC) for Mission Operations Center hosting, engineering support will be provided to the contingency flight team in getting the data system, e.g., work stations and network connections, into an operable state. This includes initial deployment and periodic testing. In the event of emergency activation, the mission flight team will be responsible for operating their equipment. (Note: The ECC is a scaled-down version of the mission operations center. One of its purposes is to allow the mission to resume limited operations in the event of a natural disaster or other catastrophic event that disables certain facilities of a mission operations center[45]. The ECC has limited space; thus, support is subject to negotiation)

4.4 Emergency Limited Continuity of Operations

In the event of catastrophic event where the Deep Space Operation Center in Pasadena, California is disabled, the DSN will provided limited operations to enable missions to communicate with their spacecraft via the Emergency Control Center at Goldstone. Missions that subscribe to this support can continue to receive telemetry, tracking and command services via connection with the remote MOC or the resided Emergency MOC Hosting equipment. Data delivery however would be constrained by the limited bandwidth between the DSN ECC and remote MOC.[46]

4.5 RF Compatibility Test Support

Before launch, RF compatibility test equipment will be available for use in validating the RF interface compatibility between the spacecraft and the DSN, signal processing for telemetry, command, and tracking functions, and some data flow compatibility. The compatibility test equipment emulates the data modulation/demodulation capabilities via an RF link hardline to the customer's spacecraft.

Additional details about this support are addressed in section 6.3.1.1.8 "Compatibility Testing DSN Costing".

---

[45] Module 203, Emergency Mission Operations Center Support, DSN Mission Interface Design Handbook, Document No. 810-007, Jet Propulsion Laboratory, Pasadena, California

[46] Ibid

In general, not performing compatibility testing will require a DSN waiver since it affects the DSN assurance to support the missions.

4.6 Mission System Test Support

The DSN assets will be available for supporting the various system tests conducted by the flight projects. Examples of these tests are spacecraft system tests (ATLO system tests) and end-to-end system tests. Since the objective of the system tests typically goes beyond the verification of the point-to-point RF capabilities, some operational DSN assets in addition to those test facilities used for RF compatibility tests may be required. Note that in ATLO test configuration, the interface from flight hardware to DSN equipment may be in a different form compared to that of post-launch support, e.g., digital data interface such as VME or serial RS-232 may be required, instead of RF.

4.7 Spectrum and Frequency Management Support

JPL is responsible to NASA for managing the deep space spectrum and frequency resources for all JPL missions in accordance with the national and international regulations. In that capacity, JPL Spectrum Office helps the customers with frequency selection process. This process includes coordinating the selected frequencies with other users of the spectrum, ensuring compliance with the Space Frequency Coordination Group (SFCG), performing conflict analysis, making interference avoidance/mitigation recommendations, and carrying out the licensing process with the National Telecommunication and Information Administration (NTIA). For deep space missions operated by other NASA centers or foreign space agencies, JPL spectrum Office will assist the mission with frequency selection based on the SFCG Administration Resolution 21-1. For these missions, the licensing is the responsibility of the NASA center or the foreign space agency that operates the mission.

4.8 Spacecraft Search / Emergency Support

In time of severe spacecraft anomaly causing the loss of communications with the ground, the DSN can provide equipment, such as a higher-power transmitter, as well as personnel to support customers in re-establishing contact with the spacecraft. For missions that subscribe to DSN telemetry, tracking and command services for its nominal operations, the spacecraft search/emergency support is automatically included in the service. For missions that do not subscribe to DSN services for its nominal operations, this support is a stand-alone engineering support that can be requested when the the need arises.

The ability to search for a lost spacecraft depends on the number of places that need to be searched, and on the signal level. There can be several dimensions in the search region: frequency, frequency rate, direction (ephemeris) and perhaps time, if the signal may be time varying. The difficulty of the search, or the time required for the search, increases approximately proportionally to the size of the search region, and inversely with the assumed minimum possible SNR.

One dimensional searches, such as just over frequency, are fairly easy, as are two-dimensional searches over limited regions, such as over small uncertainties in frequency and frequency rate or space. Large two dimensional searches are very difficult, but can be done with the custom capabilities.

The Spacecraft Search covers the following scenarios, in an increasing complexity: Frequency and Time Searches, Spatial Search, Frequency Rate Search, Extreme Weak Signal Search, Wideband Spatial Searches, and Extremely Weak Signals with Frequency and Frequency Rate Uncertainty.

Depending on the spacecraft conditions, the amount of engineering work to be done (e.g., planning and analysis) will vary. If a spacecraft needs this service, the DSN will work with the mission to determine a plan to scope the search strategy.

4.9 Initial Acquisition

Upon launch, the spacecraft is in a potentially significantly different state than it will be for the rest of the mission. As such, initial acquisition is given a special consideration to ensure proper contact is made with spacecraft.

In general, the DSN commits to acquiring the spacecraft within 10 minutes of the latter of the times the spacecraft rising over the acquiring antenna and the spacecraft transmitter being turned on. This latency – longer than typical operations post initial acquisition – allows time for dealing with issues that often arise during an initial acquisition, such as spacecraft location uncertainty and spacecraft transmitting antenna orientation uncertainty. Factors that may cause the increased acquisition time include launch vector outside of the prediction, spacecraft transponder warm up time, combination of low bit rates and long telemetry frame size, uncertainty in spacecraft mode (e.g., nominal versus safe mode), and spacecraft rotation uncertainty (antenna not pointed at Earth).

There may be also a “gap” in the DSN coverage, due to the trajectory of the spacecraft. If so, the DSN would work with the project to determine options for filling the gap (using non-DSN assets) and to implement such options. The costs for non-DSN assets are paid for by the project.

Section 5
DSN Stations – Operating Modes and Characteristics

Some of the capabilities described within this Services Catalog include multiple modes of operation and alternative configurations within their standard scope. This enables them to better suit a particular customer's requirements. This section provides some additional information describing these alternatives, as well as defining key performance characteristics. The DSN Telecommunications Link Design Handbook[47] provides a more comprehensive treatment of these topics.

To protect the equipment from power saturation damage, the DSN has a constraint on the maximum received signal strength. In normal mode, the system can support a maximum signal level of -85 dBm. In special support mode, e.g., Launch Early Orbit Phase, Earth flyby or Earth return operations, etc., the DSN system can be configured in a low-gain mode to accommodate a maximum signal level of -65 dBm, albeit with a more signal degradation. **Missions *must* limit the spacecraft downlink EIRP so as to not exceed these two levels. Missions need to alert DSN when operates in the -85 to -65 dBm range for proper DSN configuration.**

5.1 Station Characteristics

The standard configuration for Telemetry, Tracking, and Command (TT&C) is one ground antenna with dedicated telemetry, tracking, and command equipment interacting with a single spacecraft. In this configuration, dual communication links, e.g., simultaneous X- and Ka-band links, between a spacecraft and a DSN station can also be accommodated. Table 5.1, "DSN Stations and RF Capabilities" provides an overview of the available DSN stations in terms of antenna size and type, location, operating bands, EIRP, and signal gain.

[47] DSN Telecommunications Link Design Handbook, Document No. 810-005, Rev. E, Jet Propulsion Laboratory, Pasadena, California

Table 5-1. DSN Station and RF Capabilities

Antenna Type	Complex/Site	Antenna ID	Uplink Freq (MHz)	EIRP (dBW)	Downlink Freq (MHz)[2]	Gain (dBi) / G/T (dB/K)[1]
34M BWG	Goldstone, CA USA	DSS 24	S: 2025 - 2120	78.7 - 98.7	S: 2200 - 2300	56.7 / 40.8
	Canberra, Australia	DSS 34	S: 2025 - 2120	78.7 - 98.7	S: 2200 - 2300	56.7 / 40.8
	Madrid, Spain	DSS 54	S: 2025 - 2110 [4]	78.7 - 98.7	S: 2200 - 2300	56.7 / 40.8
	Goldstone, CA USA	DSS 25	X: 7145 - 7235	89.5 - 109.5	X: 8400 - 8500	68.2 / 54.2
		DSS 26	X: 7145 - 7235	89.5 - 109.5 89.5 - 115.5 [6]	X: 8400 - 8500	68.2 / 54.2
	Canberra, Australia	DSS 34, 35, 36[3]	X: 7145 - 7235	89.5 - 109.5	X: 8400 - 8500	68.2 / 54.2
	Madrid, Spain	DSS 54, 55	X: 7145 - 7235	89.5 - 109.5	X: 8400 - 8500	68.2 / 54.2
	Goldstone, CA USA	DSS 24	-	-	Ka: 25500 - 27000	76.5 / 58.2
		DSS 25	Ka: 34315-34415	97.8 - 103.8	Ka: 31800 - 32300	78.4 / 61.1
		DSS 26	-	-	Ka: 31800 - 32300	78.4 / 61.1
	Canberra, Australia	DSS 34	-	-	Ka: 25500 - 27000 Ka: 31800 - 32300	76.5 / 58.2 78.4 / 61.1
		DSS-35, 36[3]	-	-	Ka: 31800 - 32300	78.4 / 61.1
	Madrid, Spain	DSS 54	-	-	Ka: 25500 - 27000	76.5 / 58.2
		DSS 54, 55	-	-	Ka: 31800 - 32300	78.4 / 61.1
34M HEF	Goldstone, CA USA	DSS 15	S: 2025 - 2110	71.8 - 78.8	S: 2200 - 2300	56.0 / 39.4
	Canberra, Australia	DSS 45	S: 2025 - 2110	71.8 - 78.8	S: 2200 - 2300	56.0 / 39.4
	Madrid, Spain	DSS 65	S: 2025 - 2110	71.8 - 78.8	S: 2200 - 2300	56.0 / 39.4
	Goldstone, CA USA	DSS 15	X: 7145 - 7190	89.8 - 109.8	X: 8400 - 8500	68.3 / 53.2
	Canberra, Australia	DSS 45	X: 7145 - 7190	89.8 - 109.8	X: 8400 - 8500	68.3 / 53.2
	Madrid, Spain	DSS 65	X: 7145 - 7190	89.8 - 109.8	X: 8400 - 8500	68.3 / 53.2
70M	Goldstone, CA USA	DSS 14	S: 2110 - 2118 S: 2090 - 2091	85.6 - 105.6 85.6 - 97.4	S: 2270 - 2300	63.5 / 49.8
	Canberra, Australia	DSS 43	S: 2110 - 2118 S: 2110 - 2118 S: 2090 - 2091	85.6 - 105.6 106.7 - 118.7 [5] 85.6 - 97.4	S: 2270 - 2300	63.5 / 49.8
	Madrid, Spain	DSS 63	S: 2090 - 2091	85.6 - 97.4	S: 2270 - 2300	63.5 / 49.8
	Goldstone, CA USA	DSS 14	X: 7145 - 7190	95.8 - 115.8	X: 8400 - 8500	74.5 / 61.5
	Canberra, Australia	DSS 43	X: 7145 - 7190	95.8 - 115.8	X: 8400 - 8500	74.6 / 61.5
	Madrid, Spain	DSS 63	X: 7145 - 7190	95.8 - 115.8	X: 8400 - 8500	74.6 / 61.5

[1] G/T is referenced to 45-deg elevation, 90% weather condition (CD=0.90), and diplexed configuration.

[2] Frequency band is referenced to spacecraft communications. Wider X-band (8200-8600 MHz) is available for VLBI and radar services

[3] DSS-36 antenna is under construction; expected to be operational by the end of 2016.

[4] Deep space S-band transmission (2110-2120 MHz) is restricted to emergency support at Madrid.

[5] High power S-band transmission at DSS-43 is restricted to Voyager mission (legacy support).

[6] DSS-26 antenna is expected to have a higher EIRP with a new 80 kW transmitter in late 2015.

5.2 Alternative Station Operating Modes

DSN signal capture efficiency is influenced by several factors including: station-operating mode (diplexed vs. non-diplexed), aperture size, operating frequency, and various station configurations. In addition to the standard one-station configuration, there are other alternatives. This section describes these operating modes. Note that since configuring these alternative operating modes often involves very labor-intensive activities at the DSCC, the use of any combination of them (e.g., MSPA together with arraying and MSPA with Delta-DOR observations) for a given pass or during a given period of time at a DSCC will have to be negotiated taking into account the availability of operational resources at the DSCC.

5.2.1 Multiple Spacecraft Per Antenna (MSPA)

Multiple Spacecraft Per Antenna (MSPA) is a special configuration wherein multiple receivers are connected to a single DSN antenna permitting the simultaneous reception of signals from two or more spacecraft. MSPA makes more efficient use of DSN facilities by enabling simultaneous data capture services to several spacecraft, provided that they are all within the Earth station's beam width. MSPA is not a service; it is a capability for resolving some schedule conflicts.

Presently, the DSN can receive signals from two spacecraft simultaneously in a 2-MSPA configuration. Capability to support up to four spacecraft simultaneously in a 4-MSPA configuration is under evaluation.

MSPA design limits uplink transmissions to a single spacecraft at a time. Thus, only one spacecraft can operate in a two-way coherent mode, all others must be in one-way non-coherent.

Only the spacecraft having the uplink can be commanded. MSPA users can agree to share the uplink, switching during the pass. Approximately 30 minutes are required to reconfigure the uplink to operate with a different spacecraft resulting in 30 minutes plus RTLT before coherent communication takes effect.

Listed below are requirements for users of MSPA:

- All spacecraft must be within the beam width of the requested DSN station
- All spacecraft must operate on different uplink and downlink frequencies and have polarizations (up and down) consistent with the antenna's capability
- Commands can only be sent to the spacecraft having the uplink
- High quality (2-way) radio metric data can only be obtained from the spacecraft operating in the coherent mode.

5.2.2 Antenna Arraying

Antenna Arraying is another special configuration wherein the signals from two or more DSN antennas are combined to create the performance of an antenna larger than either. Arraying is also available for combining signals with different polarizations (RCP and LCP). Combining is performed at an intermediate frequency (IF) resulting in improved performance of both the carrier and data channels. Arraying 34m antennas with a 70m antenna improves the performance of the 70m antenna. At X-band, four 34m antenna arraying would achieve within 0.5 dB of the 70m performance due to aperture and system noise difference plus some array processing loss. Arrayed operation in the S-band (2GHz) and Ka-band (32 GHz) is also supported. Like MSPA, arraying is a capability, not a service.

5.2.3 Interferometry Tracking

Interferometry Tracking is an operating mode in which two stations, each at a different DSN site, are configured to perform spacecraft tracking using a Very Long Baseline Interferometry (VLBI) technique, i.e., Delta-DOR. It allows determination of the angular position (or plane-of-sky position) of a deep space spacecraft relative to a natural radio source by measuring the geometric time delay between received radio signals at the two stations.

5.2.4 Site Diversity

Site diversity is a special configuration in which multiple sites are scheduled to improve the certainty of achieving the desired service availability. This is normally done for critical events (e.g., orbit insertions, landings, etc.) This can be done deterministically (sites are scheduled without reference to equipment or

weather conditions), or adaptively (sites are scheduled on short notice only when needed). The ability to use such techniques depends strongly on the customer's ability to adapt, the availability of resources, and/or the ability to find other customers who are willing to make arrangements to relinquish their resources on short notice.

Section 6
Obtaining Services and Support

6.1 General Policy

6.1.1 Access

Access to the capabilities offered in this services catalog is governed by the DSN Service Commitment Process. Generally speaking, the services are available to any NASA-sponsored flight project or experiment investigation. Further, non-NASA flight projects or experiment investigations, whether US or foreign, may also avail themselves of the capabilities described herein, provided they first negotiate an agreement to that effect with NASA headquarters.

6.1.2 Effective Duration of DSN Commitments

DSN Commitments to Missions, as documented in the DSN Service Agreements, are for the duration of the approved mission phase. The commitments need to be re-established upon mission extension phase.

6.1.3 Use of Standard Services

The standard services described herein this document are DSN-owned and operated by DSN staff. The use of non DSN-owned equipment needs to be negotiated between DSN and mission.

6.1.4 Charges for Mission-unique Capabilities

Some customers will require better performance than that provided by the standard data services. Similarly, "tailored" services can be provided when the standard services must be heavily customized in order to meet the customer's operations needs, or when the nature of the customer's endeavor requires functions that are not supported by the standard services. It is expected that mission will carry additional cost on standard services with enhanced performance and tailored services. The cost attributed to mission is the net increase to DSN cost over the whole life cycle of the services.

6.2 Points of Contact

The SCaN Mission Commitment Office serves as the NASA Headquarters point-of-contact regarding the capabilities described herein.

The JPL DSN/Mission Services Planning and Management Office serves as the liaison between the customers and the DSN for all implementation and operations related to the DSN commitments. The Mission Interface Manager (MIM) is the mission point of contact throughout the life of the mission.

Customers are given more specific points of contact, with reach-back across the DSN as appropriate.

6.3 Pricing

NASA has established policies that govern how costs for the capabilities described herein are allocated between multi-mission base funding and project (i.e., mission) funding. The remainder of this section focuses on the relationship between those policies and the available multi-mission capabilities.

A "grass-roots", design-based, costing exercise is highly recommended for estimation of costs for services and support that are not covered under the Aperture Fee (see below). This is typically conducted for

missions in the formulation phase by an engineering team organized through the DSN Mission Support Definition and Commitments Office.

6.3.1 Pricing for Standard Data Services

Pricing for DSN utilization (i.e., standard Data Services) is based on Aperture Fees. These are computed using an empirically derived algorithm established by NASA.

Cost numbers supplied in this Section are for planning purposes only. To ensure accurate application of this information and to validate cost estimates please contact the DSN Mission Support Definition and Commitments Office.

The algorithm for computing DSN *Aperture Fees* embodies incentives to maximize DSN utilization efficiency. It employs *weighted hours* to determine the cost of DSN support. The following equation can be used to calculate the *hourly Aperture Fee* (AF) for DSN support.

$$AF = R_B [A_W (0.9 + F_C / 10)] \qquad \text{(equation 6-1)}$$

Where:

- AF = weighted *Aperture Fee* per hour of use.
- R_B = contact dependent hourly rate ($1057/hr. for FY10, with adjustment for appropriate inflation rate)*
- A_W = aperture weighting:
  - = 1.00 for a single 34-meter station (i.e., 34 BWG and 34 HEF).
  - = 2.00 for a two 34-meter station array.
  - = 3.00 for a three 34-meter station array.
  - = 4.00 for a four 34-meter station array.
  - = 4.00 for 70-meter stations.
- F_C = number of station contacts, (contacts per calendar week).

*Contact the DSN Mission Support Definition and Commitments Office for the latest hourly rate.

The *weighting factor* graph (Figure 6-1) below shows relative antenna costs graphically illustrating how *hourly costs* vary with *station contacts* and the relationships between antennas. It demonstrates the benefits of restricting the number of spacecraft-Earth station contacts each week.

A *station contact, F_C,* may be any length but is defined as the smaller of the spacecraft's scheduled pass duration, view period, or 12 hours.

For a *standard pass*, a 45-minute setup and a 15-minute teardown time must be added to each scheduled pass to obtain the *station contact* time (other configuration times apply to Beacon Monitoring and Delta-DOR passes – see relevant cost sections below). Note that scheduled pass-lengths should be integer multiples of 1-hour with a maximum of 12 hours per pass.

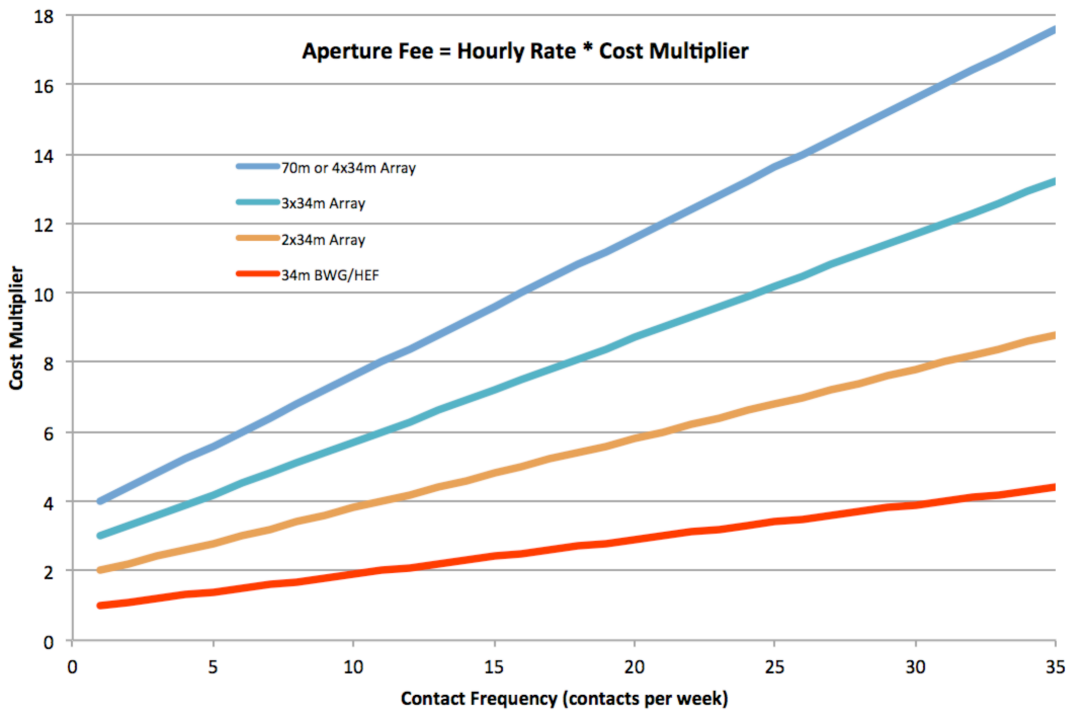

Figure 6-1. Aperture Fee Calculation

Total DSN cost is obtained by partitioning mission support into calendar weeks, grouping weeks having the same requirement in the same year, multiplying by weighted *Aperture Fee*, and summing these fees over the mission's duration. *Aperture Fees* include several services in the following categories: command, telemetry, tracking, radio science, radio astronomy, radar science, routine compatibility testing, and commitment & mission interface (MIM) support.

6.3.2 DSN Costing Calculations

Calculate DSN costs (*Aperture Fee, AF in $/Hr.*) by selecting a specific antenna type and then determining the number and duration of tracking passes required to satisfy project commanding, telemetry, and navigation needs for launch, cruise, TCM, and science phases. Each tracking pass, except Beacon Mode, Delta-DOR, and a few others must be increased in length by one-hour for re-configuration. Once the pass length and number of passes is determined, multiply the aggregate hours by the hourly *Aperture Fee*, adjusted to the applicable *fiscal year,* to compute the mission's cost (in FY Dollars) using the equation above.

A form, entitled: *DSN Mission Support Costs*, can be used to calculate DSN *Aperture Fees* in real-year or fiscal year dollars. An Excel 2000 spreadsheet is available at http://deepspace.jpl.nasa.gov/advmiss/ for the preparation of the cost estimates. For further support, contact the DSN Mission Support Definition and Commitments Office.

6.3.3 Included Services

The Aperture Fee is for full cost accounting purposes and is not an expense to a NASA-sponsored mission. The aperture fee accounts for the following standard data services and engineering support:

Data Services

- Command Services
- Telemetry Services
- Tracking Services
- Calibration and Modeling Services
- Radio Science Services
- Radio Astronomy & VLBI Services
- Radar Science Services

Engineering Support

- Systems engineering support
- Advance mission planning support
- Emergency mission operations center hosting
- Emergency limited continuity of operation
- RF compatibility test support
- Mission system test support
- Spectrum and frequency management support
- Spacecraft search support
- Initial Acquisition Provision

Note: Costs for ground communications inherent in providing these standard services are included, but costs for interface from DSN to mission MOS are not. See Ground Communications Interface, Section 3.8 for additional details. Also note that some Engineering Support costs may be outside the Aperture Fee coverage, depending on the level of support needed and that command and telemetry services may need some adaptation that the missions pay for.

6.3.4 Multiple Spacecraft Per Antenna (MSPA) DSN Costing

Some flight programs, such as those surveying Mars, have clustered several spacecraft about a planet. It is possible to simultaneously capture telemetry signals from two or perhaps more spacecraft provided that they lie within the beam width of the Earth station's antenna.

If this situation applies and the constraints list below are acceptable, then it may be possible to reduce the Antenna cost by half for spacecraft operating without an uplink in a non-coherent mode. To calculate the cost, first compute the *Aperture Fee* using the equation 6-1 above.

For a Project to avail itself of the MSPA savings, the following constraints must apply:

- All spacecraft must lie within the beam width of the requested antenna.
    - Projects must accept reduced link performance from imperfect pointing.
- Spacecraft downlinks must operate on different frequencies.
- Only one spacecraft at a time can operate with an uplink in a coherent mode.
    - Commands can only be sent to the spacecraft receiving an uplink.
    - Ranging & coherent Doppler are available from the spacecraft in a 2-way mode.
    - Remaining spacecraft transmit 1-way downlinks with telemetry only.

Thereafter, apply the correction factor according to the formula:

$$AF' = (0.50)\ AF \qquad \text{(equation 6-2)}$$

Where: AF' = weighted *Aperture Fee* per hour of use for spacecraft operating without an uplink in the MSPA mode. (Spacecraft having an uplink when operating in an MSPA mode should use the aperture fee (AF) computed according to equation 6-1.)

The reduced price, AF', reflects the lack of capability resulting from no uplink communications. It is based upon the loss of commanding and ranging services to the spacecraft operating in a one-way non-coherent mode. If MSPA users agree, all could time-share the uplink and then re-allocate cost savings according to their individually negotiated sharing arrangements. When switching the uplink from one spacecraft to the next, full costs, *AF*, begin to apply to the new two-way coherent user at the onset of the switching operation.

Note: MSPA exists if, and only if, the same DSN antenna is simultaneously supporting two or more spacecraft without regard to whether an uplink is required by either.

Some examples may prove helpful. If a single DSN antenna is capturing telemetry from two spacecraft simultaneously, one with an uplink and the other in a one-way mode, the one with the uplink is at full cost (*AF*) [equation 6-1] while the other without the uplink calculates its cost at *AF' = 0.5 AF*. Where neither of the two spacecraft has an uplink, then each pays an *Aperture Fee' (AF')* of 0.5 *AF*. **If the pass of one spacecraft begins before the other, or lasts beyond another, then there is no MSPA and that user is charged the full *Aperture Fee, AF* irrespective of whether there is an uplink.** Figure 6-2 may help to clarify the rules.

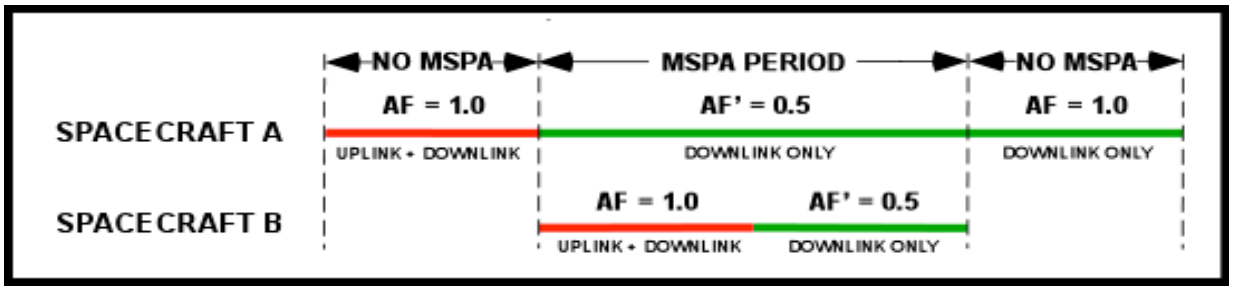

Figure 6-2. MSPA Aperture Fee

6.3.5 Clustered Spacecraft Aggregated DSN Costing

Occasionally a mission comprises several spacecraft flying in a geometric formation, but with spatial separation too large to utilize MSPA. Rather than request simultaneous support from several DSN stations, the project may agree to sequentially contact each spacecraft. From a project viewpoint, it is desirable to treat sequential DSN communications with several spacecraft as a single DSN contact for costing purposes. This section outlines the conditions when aggregation is permitted.

The DSN *station configuration* is a key element in establishing the continuous nature of a contact. If a new configuration is required for each spacecraft in the cluster, then support of several spacecraft assumes the character of individual contacts arranged in a sequential order. Conversely, if everything at a DSN station, except the direction in which the antenna is pointing, remains fixed when transitioning to a different spacecraft, the essential character is one of a single contact.

Station configuration involves loading predicts containing: transmit and receive frequencies, Doppler frequency estimates, data routing information, measuring station ranging delay, etc. These may be unnecessary when the several spacecraft:

- Operate on the same frequency,

- Require identical data routing, and
- Do not utilize ranging.

For missions consisting of multiple spacecraft, each of which receives commands and/or transmits telemetry sequentially to and from a single DSN Earth station in a series of contiguous communications, then aggregation of individual pass times into a single contact may be reasonable.

Clustered Spacecraft Aggregated DSN Costs are calculated by:

- Adding a single setup and teardown time for the aggregated period,
- Including costs for time needed to move the spacecraft from one spacecraft to the next,
- Treating the series of links during a pass as a single contact for the costing algorithm,
- Computing the cost following equation 6-1.

All missions consisting of a cluster of spacecraft not meeting the above criteria should calculate their costs using equation 6-1 treating each sequential communication with a member of the cluster as a separate and individual contact.

6.3.6 Data Relay DSN Costing

Data between a spacecraft or a lander and a DSN station, which is relayed through another spacecraft (likely an orbiter), may be unaccompanied or interspersed with data from other sources. At any specific time, a DSN station may be communicating with one or more spacecraft/landers.

Pass cost can be found by calculating the time required to return the total amount of relayed data, assuming that only this data being transmitted from the orbiting relay element or by assuming 1-hour, whichever is greater.

Station configuration times need not be considered. Proposals should state the rationale and assumptions for the computed share of the DSN cost carefully, completely, and in sufficient detail so that evaluators can independently verify the computations.

6.3.7 Delta-DOR DSN Costing

Under the correct geometric circumstances, Delta Differential One-way Range (Delta-DOR) can result in a net reduction in needed tracks. This is so because adding Delta-DOR passes can reduce the number of contacts needed to collect long data arcs of coherent Doppler and ranging measurements necessary to compute a spacecraft's trajectory. Delta-DOR can also be used as an independent data source to validate orbit solutions. However, two widely separated Earth stations are required simultaneously to view the spacecraft and the natural radio sources.

To calculate a cost for a Delta-DOR pass, users should determine:

- The DSN stations desired for the Delta-DOR pass,
- Amount of Delta-DOR data required to obtain the spacecraft's position, which translates to a pass length (generally 1 or 2 hours),
- Pre-configuration time of 45 minutes for Delta-DOR, same as that for a *standard pass*. The post-configuration time also remains at 15 minutes for each Delta-DOR pass, and
- Cost of the pass by summing the cost for the two desired DSN stations plus pre- and post-configuration times over the length of the pass.

6.3.8 Beacon Tone Monitoring DSN Costing

Beacon Tone Monitoring is a low-cost method for verifying spacecraft health. A spacecraft transmits up to four predetermined tone frequencies (subcarriers) indicating its current condition. Spacecraft must be designed to monitor their subsystems and direct an appropriate tone be transmitted. Beacon Tone Monitoring is particularly useful during long cruise periods when little or no science data is being collected. This beacon support should not be confused with tone detection methods used for support such as Entry-Descent-Landing (EDL) operations.

Beacon Tone tracks (exclusive of configuration time) are generally short (40 to 60-minutes) and must occur at pre-scheduled times when the spacecraft is in view of a DSN complex. The DSN captures the detected tones and deliver the to the mission users. The mission users, not DSN personnel, must determine the meaning of the received tone.

Because no science or housekeeping telemetry data is received, it is possible to reduce the configuration times and hence cost for Beacon Tone Monitoring. Missions calculating a cost for Beacon tone Monitoring should compute *Aperture Fee (AF)* for the requested DSN antenna using a pre-configuration time of 15-minutes and a post-configuration time of 5-minutes (rather than 45-minutes and 15-minutes respectively). The minimum pass length, including configuration times, is 1-hour (40-minute pass plus 20-minutes of pre- and post-configuration time).

6.3.9 Compatibility Testing DSN Costing

The DSN encourages pre-launch compatibility testing as a means to eliminate post launch anomalies and expensive troubleshooting. The DSN maintains two facilities known as the Development and Test Facility (DTF-21), and a Compatibility Test Trailer (CTT-22). The DSN also has equipment at the NASA Launch facility (MIL-71) to support the pre-launch testing. Except for the high power transmitter, antenna, and low noise-receiving amplifier, which are not included, these facilities are configured much like an operational DSN Earth station.

Approximately eighteen months prior to launch, projects should bring their Radio Frequency Subsystems (RFS) to DTF-21 for testing. Testing requires approximately one to two weeks and includes such items as RF compatibility, data flow tests, and transponder calibration. However, compatibility testing does not include the ability to test Ka-band uplink, Radio Science, or Delta-DOR capabilities. Additional testing can be arranged by utilizing the CTT at the spacecraft manufacturing facility, if required.

Because the DSN believes that this testing materially improves the likelihood of mission success, no charge is made for the use of the DTF-21 facility for a single set of standard compatibility tests (however, charges will be made for tests beyond the standard suite, or for multiple occurrences). It is included in the hourly-dependent rate, R_B, used in equation 6-1. Use of the CTT-22 facility for a single set of standard compatibility tests is also included. For each additional use of the CTT-22 facility the only charge is to cover the travel and per-diem costs of the DSN personnel and the transportation cost of moving the test trailer to the user facility.

6.4 Scheduling

Scheduling for multi-mission services and support differs, depending on the type of capability being provided.

- Data Services – Scheduling of data service instances is done by user community using the Service Scheduling Software, via a process coordinated and managed by the DSN Planning and Scheduling Office. The output mid range schedule, at least eight weeks in advance of tracking activities, is made available to missions for spacecraft sequencing purposes. Changes in the interim period can be incorporated and refined into a conflict-free 7-day schedule. It must be

noted that the DSN neither allocates nor commits its antenna resources. Project tracking time allocations are performed by a committee of mission representatives, facilitated by DSN Planning and Scheduling Office.

- Engineering Support – Whether level-of-effort or for specific events, schedules for Engineering Support Activities must be negotiated between mission and the DSN Mission Interface Manager, and documented in the commitment document, e.g., DSN Service Agreements.

6.5 Data Services Provisioning

Figure 6-3 depicts, at high level, the interfaces involved in actual data service provision (there are also, of course, interfaces between the DSN and the customer's flight system over space links, which are not shown in the figure). Once a requested service has been scheduled, the customer interacts with the Service Management function by submitting additional service request information as needed. Typically this occurs well in advance of the pass, although there is a limited capability for "near-real-time" updates. The Service Management function interprets the request, allocates and configures the necessary assets, and provides service execution monitor and control. The customer's user function or process establishes a connection to the service instance and mission data is exchanged (this may be as simple as a file transfer), either during or subsequent to the pass.

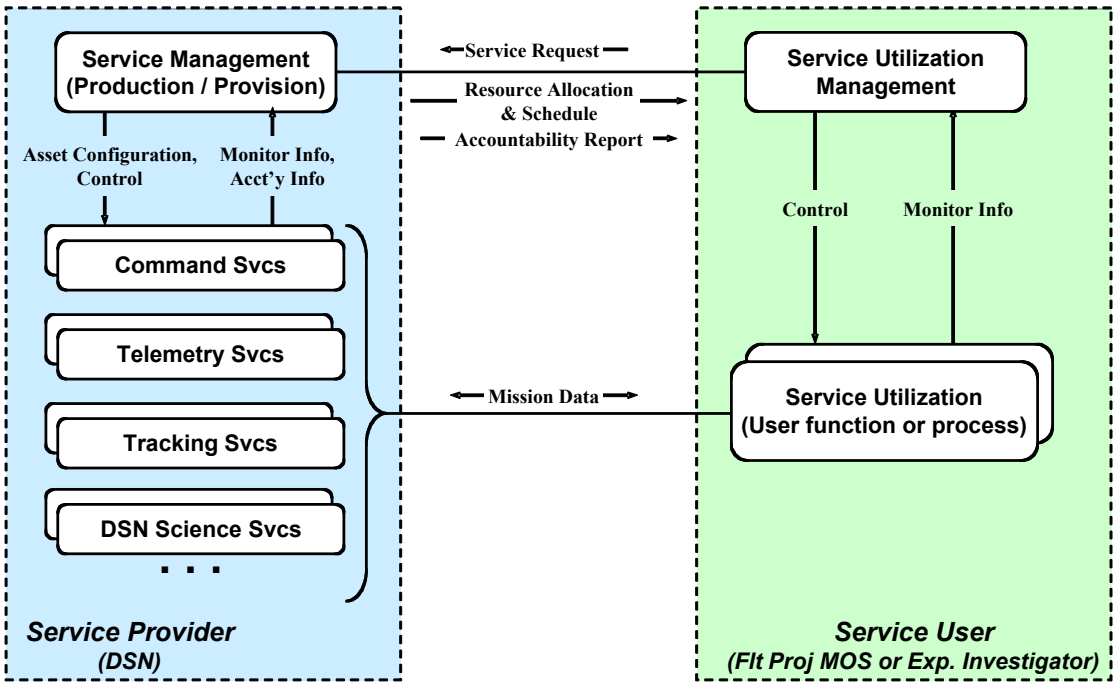

Figure 6-3. Data Service Interfaces

Appendix A
Glossary and Acronyms

AF.....Aperture Fee

AMMOS.....Advanced Multi-Mission Operations System-- a multi-mission operations system, which provides adaptable, reusable services and tools relating directly to the conduct of mission operations

AOS.....Advanced Orbiting System

Aperture Fee.....An empirically derived algorithm established by NASA for apportioning DSN utilization costs

API .....Application Program Interface

ATLO .....Assembly, Test, and Launch Operations

BWG .....Beam Waveguide

Capability .....Used generically in this Services Catalog to refer to any service and support used by missions.

CCSDS .....Consultative Committee for Space Data Systems

CFDP.....CCSDS File Delivery Protocol

CLTU .....Command Link Transmission Units

CSO.....NASA Communications Services Office

CTT .....Compatibility Test Trailer

Customer .....An organization that acquires capabilities from the DSN office in order to conduct a flight project or experiment investigation

Decommissioned.....Applies to a capability or facility that is no longer supported for use by any customer

Delta-DOR .....Delta-Differential One-Way Ranging

DSA.....DSN Services Agreement

DSCC .....Deep Space Communications Complex

DSN.....Deep Space Network – A multi-mission operations system which provides transport of mission data over space links, as well as observational science utilizing those links

DSN Science .....Refers collectively to Radio Science services, Radio Astronomy / VLBI services, and Radar Science services, or to the data and meta-data generated by these services

DSOC .....Deep Space Operations Center

DTF .....Development and Test Facility

ECC.....Emergency Control Center

EIRP .....Effective Isotropic Radiated Power

EOP .....Earth Orientation Parameters

ERT .....Earth Receive Time

GDS.....Ground Data System

GEO .....Geosynchronous Earth Orbit

HEF .....High Efficiency (34-m antenna)

IERS .....International Earth Rotation and Reference Systems Service

IF ..... Usually Intermediate Frequency – referring to a particular region in the electromagnetic spectrum. There may be a stray occurrence or two meaning "interface"

ISO ..... International Organization for Standards

ITU ..... International Telecommunication Union

I&T ..... Integration and Test: A development activity comprising the assembly of a system from its constituent components and ensuring that the result functions as required.

kbps ..... Kilo-bits per second, i.e., 1,000 bits per second (not 2^{10} or 1024 bits per second)

Mbps ..... Mega-bits per second, i.e., 10^6 or 1,000,000 bits per second

MERR ..... Mission Events Readiness Review

MIM ..... Mission Interface Manager

Mission ..... Used generically in the Services Catalog to refer to a flight project, an experiment investigation conducted in conjunction with a flight project, or an experiment investigation using the DSN as a science instrument

Mission Data ..... Data that is transported via space-ground communications link, or is derived from observation of that link. Includes command data (but not all information pertaining to command preparation), telemetry (level 0 or thereabouts), tracking data (but not navigation data) and DSN science data

MOC ..... Mission Operations Center

MOS ..... Mission Operations System

MSA ..... Mission Support Area

MSPA ..... Multiple Spacecraft Per Antenna

NASA ..... National Aeronautics and Space Administration

NICS ..... NASA Integrated Communications Services

QoS ..... Quality of Service – A defined level of performance in a communications channel or system (or, more generally in an information system)

QQC ..... Quality, Quantity, and Continuity

QQCL ..... Quality, Quantity, Continuity and Latency

RF ..... Radio Frequency

ROC ..... Remote Operations Center

RTLT ..... Round-Trip-Light-Time

Service ..... A self-contained, stateless function that accepts one or more requests and returns one or more responses through a well-defined, standard interface

SFCG ..... Space Frequency Coordination Group

SFDU ..... Standard Formatted Data Unit

SLE ..... Space Link Extension

SNR ..... Signal-to-Noise Ratio

SPC ..... Signal Processing Center

SPE ..... Sun-Probe-Earth or Sun-Spacecraft-Earth angle

SPICE ..... Spacecraft, Planet, Instrument, C-matrix, Events

SPK ..... Spacecraft/Planet Kernel (SPICE Ephemeris Subsystem file)

TT&C ..... Tracking, Telemetry, and Command

User ..... A person participating in flight project mission operations or an experiment investigation who interacts directly with services or support provided by DSN

UTC..... Coordinated Universal Time

VCDU ..... Virtual Channel Data Units

VLBI ..... Very Long Baseline Interferometry

VPN..... Virtual Private Network

Appendix B
Document References

"Low-Rate Telecommand Systems" in Radio Frequency and Modulation System, Part 1 - Earth Stations and Spacecraft, CCSDS 401.0-B-18, December 2007.

"Medium-Rate Telecommand Systems" in Radio Frequency and Modulation System, Part 1 - Earth Stations and Spacecraft, CCSDS 401.0-B-18, December 2007.

Advanced Orbiting Systems (AOS) Space Data Link Protocol, CCSDS 732.0-B-2, Blue Book, July 2006

Advanced Orbiting Systems, Networks and Data Links: Architectural Specification, CCSDS 701.0-B-2, Blue Book, November 1992.

CCSDS File Delivery Protocol (CFDP), CCSDS 727.0-B-4, Blue Book, January 2007.

Deep Space Network / Detailed Interface Design, Document No. 820-013, 0159-Science, “Radio Science Receiver Standard Formatted Data Unit”.

Deep Space Network / Detailed Interface Design, Document No. 820-013, 0161-Telecomm, “Telemetry SFDU Interface”.

Deep Space Network / Detailed Interface Design, Document No. 820-013, 0162-Telecomm, “Beacon Telemetry SFDU Interface”.

Deep Space Network / Detailed Interface Design, Document No. 820-013, 0163-Telecomm, “SLE Forward Link Service and Return Link Service”.

Deep Space Network / Detailed Interface Design, Document No. 820-013, 0168-Service_Mgmt, "DSN Web Portal Services".

Deep Space Network / Detailed Interface Design, Document No. 820-013, 0172-Telecomm, “SFDU CHDO Structures”.

Deep Space Network / Detailed Interface Design, Document No. 820-013, 0188-Telecomm-CFDP, “Transaction Log File Interface”.

Deep Space Network / Detailed Interface Design, Document No. 820-013, 0191-Telecomm, “Radiated Spacecraft Command Message File (Rad_SCMF)”.

Deep Space Network / Detailed Interface Design, Document No. 820-013, 0193-Navigation-OPM, "Tracking and Navigation Orbit Parameter Message File".

Deep Space Network / Detailed Interface Design, Document No. 820-013, 0194-Navigation-OEM, "Tracking and Navigation Orbit Ephemeris Message File".

Deep Space Network / Detailed Interface Design, Document No. 820-013, 0197-Telecomm-CMDRAD, “Command Radiation List File Software Interface Specification”.

Deep Space Network / Detailed Interface Design, Document No. 820-013, 0198-Telecomm-SCMF, “Spacecraft Command Message File (SCMF) Interface”.

Deep Space Network / Detailed Interface Design, Document No. 820-013, 0199-Telecomm, “DSN AOS Frame Accountability and Accountability Correlation Messages for DSN Telemetry”.

Deep Space Network / Detailed Interface Design, Document No. 820-013, 0206-Telecomm-SLE, “SLE Inventory Report Interface”.

Deep Space Network / Detailed Interface Design, Document No. 820-013, 0211-Service Mgmt - SEQ, "Flight Project Interface to the DSN for Sequence of Events Generation".

Deep Space Network / Detailed Interface Design, Document No. 820-013, 0212-Tracking-TDM, “DSN Tracking Data Message (TDM) Interface”.

Deep Space Network / Detailed Interface Design, Document No. 820-013, 0213-Telecomm-CFDP, “Deep Space Network (DSN) Interface for the CCSDS File Delivery Protocol (CFDP)”.

Deep Space Network / Detailed Interface Design, Document No. 820-013, 0233-Telecomm, “Return Beacon Tone Service Interface”.

Deep Space Network / Detailed Interface Design, Document No. 820-013, OPS-6-12, "DSN Interface for Service Schedule".

Deep Space Network / Detailed Interface Design, Document No. 820-013, OPS-6-13, "Flight Project Interface to the DSN for Sequence of Events Generation".

Deep Space Network / Detailed Interface Design, Document No. 820-013, TRK-2-18, “Tracking System Interfaces - Orbit Data File Interface”.

Deep Space Network / Detailed Interface Design, Document No. 820-013, TRK-2-21, "DSN Tracking System, Earth Orientation Parameters Data Interface".

Deep Space Network / Detailed Interface Design, Document No. 820-013, TRK 2-23 “Media Calibration Interface”.

Deep Space Network / Detailed Interface Design, Document No. 820-013, TRK-2-33, "Tracking and Navigation SPK File Interface".

Deep Space Network / Detailed Interface Design, Document No. 820-013, TRK-2-34, “DSN Tracking System, Data Archival Format”.

DSN Mission Interface Design Handbook, Document No. 810-007, Jet Propulsion Laboratory, Pasadena, California. Online at: http://deepspace.jpl.nasa.gov/dsndocs/810-007/

DSN Telecommunications Link Design Handbook, Document No. 810-005, Rev. E, Jet Propulsion Laboratory, Pasadena, California. Online at: http://deepspace.jpl.nasa.gov/dsndocs/810-005/

Orbit Data Messages. CCSDS 502.0-B-2, Blue Book, November 2009.

Packet Telemetry Services, CCSDS 103.0-B-1, Blue Book, May 1996.

Space Link Extension Forward CLTU Service Specification, CCSDS 912.1-B-2, Blue Book, November 2004.

Space Link Extension Enhanced Forward CLTU Service Specification, CCSDS 912.11-O-1, Orange Book, July 2012.

Space Link Extension Return All Frames Service Specification, CCSDS 911.1-B-2, Blue Book, November 2004.

Space Link Extension Return Channel Frames Service Specification, CCSDS 911.2-B-2, Blue Book, January 2010.

Telecommand (TC) Space Link Protocol, CCSDS 232.0-B-1, Blue Book, September 2003

Telemetry (TM) Space Data Link Protocol, CCSDS 132.0-B-1, Blue Book, September 2003

Telemetry (TM) Space Packet Protocol, CCSDS 133.0-B-1, Blue Book, September 2003

Telemetry (TM) Synchronization and Channel Coding, CCSDS 131.0-B-2, Blue Book, August 2011

Telemetry Channel Coding, CCSDS 101.0-B-5, Blue Book, June 2001.

Time Code Formats, CCSDS 301.0-B-3, Blue Book, January 2002.

Appendix C
Service Interfaces

The following table provides a summary of the technical interface documents associated with various services.

Service	Type	Interfaces (820-013)
Command Radiation	Stream	0163-Telecomm
Command Radiation	File	0191-Telecomm 0198-Telecom-SCMF
Command Delivery	File	0213-Telecomm -CFDP 0188-Telecomm
Telemetry	Frame	0163-Telecomm 0161-Telecomm
Telemetry	Packet	0172-Telecomm
Telemetry	Telemetry File	0188-Telecomm 0213-Telecomm -CFDP
Telemetry	Beacon Tone	0233-Telecomm
Tracking	Validated Radio Metric	TRK-2-18 (restricted to legacy missions) TRK-2-34 0212-Tracking-TDM
Tracking	Delta-DOR	TRK-2-18 (restricted to legacy missions) TRK-2-34 0212-Tracking-TDM
Calibration and Modeling	Platform Calibration	TRK-2-21
Calibration and Modeling	Media Calibration	TRK-2-23
Radio Science	Experiment Access	0159-Science
Radio Science	Data Acquisition	0159-Science
Radio Astronomy / VLBI	Signal Capturing	N/A (hardware interfaces)
Radio Astronomy / VLBI	VLBI Data Acquisition	0200-Science-VLBI
Radio Astronomy / VLBI	VLBI Data Correlation	To be established
Radar Science	Experiment Access	To be established
Radar Science	Data Acquisition	To be established
Service Management	Trajectory	0168-Service-Mgmt TRK-2-33 (SPK) 0193-NAV-OPM (Orbit Parameter Message) 0194-NAV-OEM (Orbit Ephemeris Message)
Service Management	Scheduling	OPS-6-12
Service Management	Events & Link Characterization	OPS-6-13 0211-Service Mgmt-SEQ (Future missions)
Service Management	Monitor	0158-Monitor
Service Management	Accountability	0199-Telecomm 0206-Telecomm-SLE

Distribution

Contact the document owner regarding additions, deletions, or changes to this list. Additional copies of this document may be obtained by telephoning the DSN Library at 626-305-6358 or 626-305-6359, or the EDS order desk at 818-354-6222.

Hard-Copy Distribution	
DSN Library	1400-700
Electronic Notification	
Abraham, Douglas	douglas.s.abraham@jpl.nasa.gov
Bairstow, Sarah	Sarah.Bairstow@jpl.nasa.gov
Barkley, Erik	erik.j.barkley@jpl.nasa.gov
Bedrossian, Alina	alina.bedrossian@jpl.nasa.gov
Berner, Jeff	jeff.b.berner@jpl.nasa.gov
Berry, David	david.s.berry@jpl.nasa.gov
Beyer, Patrick	patrick.e.beyer@jpl.nasa.gov
Bhanji, Alaudin	alaudin.m.bhanji@jpl.nasa.gov
Border, James	james.s.border@jpl.nasa.gov
Bryant, Scott	scott.h.bryant@jpl.nasa.gov
Buckley, James	james.l.buckley@jpl.nasa.gov
Cagle, Catherine	Catherine.Cagle@jpl.nasa.gov
Chang, Christine	christine.j.chang@jpl.nasa.gov
Cornish, Timothy	timothy.cornish@jpl.nasa.gov
Dehghani, Navid	navid.dehghani@jpl.nasa.gov
Deutsch, Leslie	leslie.j.deutsch@jpl.nasa.gov
Dowen, Andrew	andrew.z.dowen@jpl.nasa.gov
Doyle, Richard	richard..j.doyle@jpl.nasa.gov
Edwards, Charles	charles.d.edwards@jpl.nasa.gov
Elliott, Robert	Robert.Elliott@jpl.nasa.gov
Finley, Susan	susan.g.finley@jpl.nasa.gov
Gatti, Mark	mark.s.gatti@jpl.nasa.gov
Greenberg, Edward	edward.greenberg@jpl.nasa.gov
Guerrero, Anamaria	anamaria.p.guerrero@jpl.nasa.gov
Hames, Peter S.	peter.S.Hames@jpl.nasa.gov
Hammer, Brian	brian.c.hammer@jpl.nasa.gov
Hodgin, Wendy	wendy.k.hodgin@jpl.nasa.gov
Jai, Ben	benhan.jai@jpl.nasa.gov
Jones, Michael D.	michael.k.jones@jpl.nasa.gov
Jongeling, Andre	Andre.P.Jongeling@jpl.nasa.gov
Kazz, Greg	greg.j.kazz@jpl.nasa.gov
Kennedy, Annabel	annabel.r.kennedy@jpl.nasa.gov

Kurtik, Susan	susan.c.kurtik@jpl.nasa.gov
Lazio, Joseph	Joseph.Lazio@jpl.nasa.gov
Levesque, Michael	michale.e.levesque@jpl.nasa.gov
Liao, Jason	jason.c.liao@jpl.nasa.gov
Louie, John	john.j.louie@jpl.nasa.gov
Malhotra, Shantanu	shantanu.malhotra@jpl.nasa.gov
Manshadi, Farzin	farzin.manshadi@jpl.nasa.gov
Marina, Miguel	miguel.marina@jpl.nasa.gov
Martin-Mur, Tomas	tomas.j.martin-mur@jpl.nasa.gov
Morris, Ray	ray.b.morris@jpl.nasa.gov
Navarro, Robert	Robert.Navarro@jpl.nasa.gov
Odea, Andrew	james.a.odea@jpl.nasa.gov
Patel, Keyur	Keyur.Patel@jpl.nasa.gov
Pham, Timothy T.	Timothy.T.Pham@jpl.nasa.gov
Raofi, Behzad	Behzad.Raofi@jpl.nasa.gov
Rascoe, Daniel	daniel.l.roscoe@jpl.nasa.gov
Rodrigues, Michael J.	Michael.J.Rodrigues@jpl.nasa.gov
Sanders, Felicia	Felicia.Sanders@jpl.nasa.gov
Scott, Charles	Charles.Scott@jpl.nasa.gov
Shin, Dong	dong.k.shin@jpl.nasa.gov
Sible, Wayne	robert.w.sible@jpl.nasa.gov
Soldan, Harvey	harvey.soldan@jpl.nasa.gov
Statman, Joseph	joseph.i.statman@jpl.nasa.gov
Tai, Wallace S.	Wallace.S.Tai@jpl.nasa.gov
Tankenson, Michael	michael.p.tankenson@jpl.nasa.gov
Teitelbaum, Lawrence	lawrence.teitelbaum@jpl.nasa.gov
Townes, Stephen	stephen.a.townes@jpl.nasa.gov
Varanasi, Padma	Padma.Varanasi@jpl.nasa.gov
Waldherr, Stefan	stefan.waldherr@jpl.nasa.gov
Weisner, Freia	Freia.Weisner@jpl.nasa.gov
Wyatt, E.J	e.jay.wyatt@jpl.nasa.gov